DC Fan Part Number Coding

TRS1225S12M-x

1 2 3 4 5 6 7

1 DC Series

TRS	Standard	TRC	Centrifugal
TRD	H_Air	TRF	Frameless Fan
TRY	H_Air	SFA	Mini Fan
TRL	H_Air	SFB	Mini Blower
TRB	DC Blower	SRL	Lower noise

2 Frame Size

15	15x15mm	92	92x92mm
17	17x17mm	97	97x94mm
18	18x18mm	120	120x120mm
20	20x20mm	130	130x130mm
25	25x25mm	133	133x133mm
30	30x30mm	150	150x150mm
35	35x35mm	172	172x151mm
38	38x38mm	180	180x180mm
40	40x40mm	200	200x200mm
45	45x45mm	225	225x225mm
50	50x50mm	280	280x280mm
60	60x60mm	Ø30	Ø 30mm
70	70x70mm	Ø172	Ø 172mm
75	75x75mm	Ø190	Ø 190mm
76	76x75mm	Ø225	Ø 225mm
80	80x80mm	Ø254	Ø 254mm

3 Thickness

04	4mm	27	27mm	55	55mm
07	7mm	28	28mm	60	60mm
08	8mm	30	30mm	67	67mm
10	10mm	32	32mm	72	72mm
12	12mm	33	33mm	80	80mm
15	15mm	38	38mm	89	89mm
20	20mm	50	50mm	92	92mm
25	25mm	51	51mm	101	101mm

4 Bearing Type

B	Ball
S	Sleeve / WRB

5 Input Voltage

05	05VDC
12	12VDC
24	24VDC
48	48VDC

6 FAN Speed

UH	Ultra High Speed	M	Medium Speed
XH	Extremely high Speed	L	Low Speed
SH	VItra High Speed	D	Ultra low Speed
VH	Extra High Speed		
H	High Speed		

7 Part Number

.R	3rd wire with Rotation Detector waveform
.F	3rd wire with Frequency Generation waveform
.3W	PWM
.4W	PWM + FG / RD
.C	Auto-restart
.H1	Higher Speed Rate (Ex.h1 ： higher +100)
.L1	Lower Speed Rate (Ex.l1 ： Lower -100)
.Q	Waterproof
.W	Wrb Bearing
.B	Frame Type
.C	Frame Type
.Z	Frame Type
.X	Motor Type
.Y	Motor Type
.S	Steel Blades
.T	Aluminium Frame
.M	Metal Frame And Blades
.G	Automotive Grade
.3P	Three Phase
.(x)T	Temperature Resistance

DC Fan Index

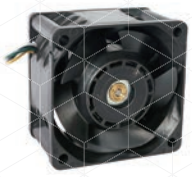

DC AXIAL FAN

A1	13x13x05mm	A14	40x40x10mm	A30	50x50x15mm	A47	70x70x15mm		
	15x15x04mm	A15	40x40x10mm	A31	50x50x15mm	A48	70x70x20mm		
A2	17x17x08mm	A16	40x40x10mm	A32	50x50x20mm	A49	70x70x25mm		
	18x18x04mm	A17	40x40x10mm	A33	50x50x25mm	A50	70x70x25mm		
A3	20x20x06mm	A18	40x40x10mm	A34	60x60x10mm	A51	75x53.8x21mm	A64	90x90x15mm
	20x20x10mm	A19	40x40x15mm	A35	60x60x15mm	A52	80x80x10mm	A65	92x92x15mm
A4	25x25x07mm	A20	40x40x20mm	A36	60x60x15mm	A53	80x80x15mm	A66	92x92x25mm
A5	25x25x10mm	A21	40x40x20mm	A37	60x60x20mm	A54	80x80x15mm	A67	92x92x25mm
A6	30x30x07mm	A22	40x40x20mm	A38	60x60x20mm	A55	80x80x20mm	A68	92x92x25mm
A7	30x30x10mm	A23	40x40x28mm	A39	60x60x25mm	A56	80x80x25mm	A69	92x92x25mm
A8	30x30x10mm	A24	40x40x28mm	A40	60x60x25mm	A57	80x80x25mm	A70	92x92x25mm
A9	30x30x15mm	A25	40x40x28mm	A41	60x60x25mm	A58	80x80x25mm	A71	92x92x25mm
A10	35x35x10mm	A26	40x40x28mm	A42	60x60x32mm	A59	80x80x32mm	A72	92x92x28mm
A11	35x35x10mm		40x40x56mm	A43	60x60x38mm	A60	80x80x32mm	A73	92x92x32mm
A12	38x38x28mm	A27	50x50x10mm	A44	60x60x38mm	A61	80x80x38mm	A74	92x92x38mm
A13	40x40x07mm	A28	50x50x10mm	A45	60x60x38mm	A62	80x80x38mm	A75	92x92x38mm
		A29	50x50x10mm	A46	70x70x10mm	A63	80x80x38mm	A76	92x92x38mm

DC Fan Index

DC AXIAL FAN

A76	100x100x25mm
A77	120x120x15mm
	120x120x20mm
A78	120x120x25mm
A79	120x120x25mm
A80	120x120x25mm
A81	120x120x25mm
A82	120x120x25mm
A83	120x120x25mm
A84	120x120x32mm
A85	120x120x38mm
A86	120x120x38mm
A87	120x120x38mm
A88	120x120x38mm
A89	120x120x38mm
A90	120x120x38mm
A91	127x127x38mm
A92	135x135x25mm
A93	Ø136x28mm
	138x138x20mm
A94	140x140x25mm
A95	140x140x25mm
A96	140x140x38mm
A97	140x140x50mm
A98	150x150x51mm
A99	160x160x50mm
A100	172x150x38mm
A101	172x150x38mm
A102	172x150x38mm
A103	172x150x51mm
A104	172x150x51mm
A105	172x150x51mm
A106	172x150x51mm
A107	172x150x51mm
A108	172x150x51mm
	Ø172x51mm
A109	Ø172x51mm
A110	Ø172x51mm
A111	172x150x55mm
A112	172x150x55mm
A113	200x200x53mm
A114	200x200x60mm
A115	200x200x70mm
A116	220x220x30mm
A117	Ø220x60mm
A118	225x225x80mm
A119	Ø254x89mm
	280x280x80mm
A120	280x280x80mm

DC BLOWER FAN

B1	15x15x04mm
	18x18x04mm
B2	20x20x04mm
	20x25x08mm
B3	20x20x08mm
	25x25x12mm
B4	25x25x12mm
	30x30x04mm
B5	20x20x06mm
B6	30x30x06mm
B7	30x30x10mm
B8	30x30x15mm
B9	35x35x07mm
B10	35x35x10mm
B11	35x35x17mm
B12	40x40x10mm
B13	40x40x15mm
B14	40x40x20mm
B15	45x46x05mm
	45x45x10mm
B16	50x50x10mm
B17	50x50x10mm
B18	50x50x15mm
B19	50x50x15mm
B20	50x50x20mm
B21	50x50x20mm
B22	50x50x25mm
B23	60x60x15mm
B24	60x60x25mm
B25	60x60x30mm
B26	75x77x15mm
B27	75x75x25mm
B28	75x75x30mm
B29	80x80x28mm
B30	93x93x25mm
	93x93x30mm
B31	98x101x27mm
B32	97x94x33mm
B33	97x95x33mm
B34	101x107x25mm
	120x120x25mm
B35	120x120x32mm
B36	120x120x32mm
B37	120x120x32mm
B38	136x145x40mm
B39	160x160x40mm
B40	188x198.5x115mm
	175x199.6x116mm
B41	220x260.2x135mm
B42	261.5x301.3x169.5mm

DC CENTRIFUGAL FAN

C1	Ø70x20mm
C1	Ø90x25mm
C2	Ø100x25mm
C3	Ø120x25mm
C3	Ø120x54mm
C4	Ø150x35mm
C4	Ø160x45mm
C5	Ø175x68mm
C5	Ø175x72mm
C6	Ø190x67mm
C6	Ø190x72mm
C7	Ø225x101mm
C7	Ø250x100mm
C8	Ø280x105mm
C8	Ø310x100mm
C9	Ø355x158mm
C9	Ø400x160mm

DC OUTER ROTOR

D1	Ø300x121mm
	Ø350x138mm
D2	Ø400x140mm
	Ø450x137mm

DC HIGH PRESSURE BLOWER

E1	40x50x28mm
	51x55x25mm
E2	50x47x30mm
	Ø53x59mm
E3	63x66x70mm
	66x70x46mm
E4	68x74x47mm
	69x79x56mm
E5	63x67x90mm
	77x66x57mm
E6	80x77x60mm
	93x130x72mm
E7	127x127x74mm

ARGB FAN

F1	120x120x25mm
F2	120x120x25mm
F3	120x120x25mm
	140x140x25mm
F4	120 SERIES
F5	240 SERIES
F6	360 SERIES
F7	140 SERIES
F8	280 SERIES
F9	Options

CPU COOLER

G1	intel LGA1700
G2	intel LGA1700
G3	intel LGA115X_1200
G4	intel LGA115X_1200
G5	intel LGA115X_1200
G6	intel LGA115X_1200
G7	intel FCLGA 3647
G8	intel FCLGA 3647
G9	intel FCLGA 3647
G10	intel FCLGA 4677
G11	intel FCLGA 4677
G12	intel FCLGA 4189
G13	AMD Socket AM4
G14	AMD Socket SP3/TR4/sTRX4
G15	AMD Socket SP3/TR4/sTRX4
G16	Heatsink
G17	Thermal Pad

Fan Application In Vehicles

4 抬頭顯示器
Head-Up Display

5 汽車影音系統
Car Audio

3 導航
Navigation

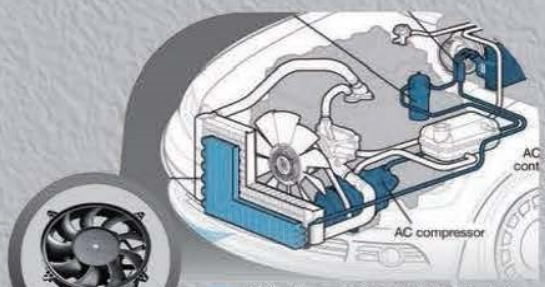

2 汽車引擎冷卻系統
Car engine cooling system

1 車用芳香機
Car Fragrance

10 車頭燈
Car Headlights

CERTIFIED IATF 16949:2016 COMPANY

符合車規認證
Certified with automotive grade IATF16949

6 大功率對講系統
High Power Intercom

7 車用冰箱
Refrigerator

巴士散熱系統
Bus Heating System

汽車冷排扇
Condenser fan

> SWSLNF-335X

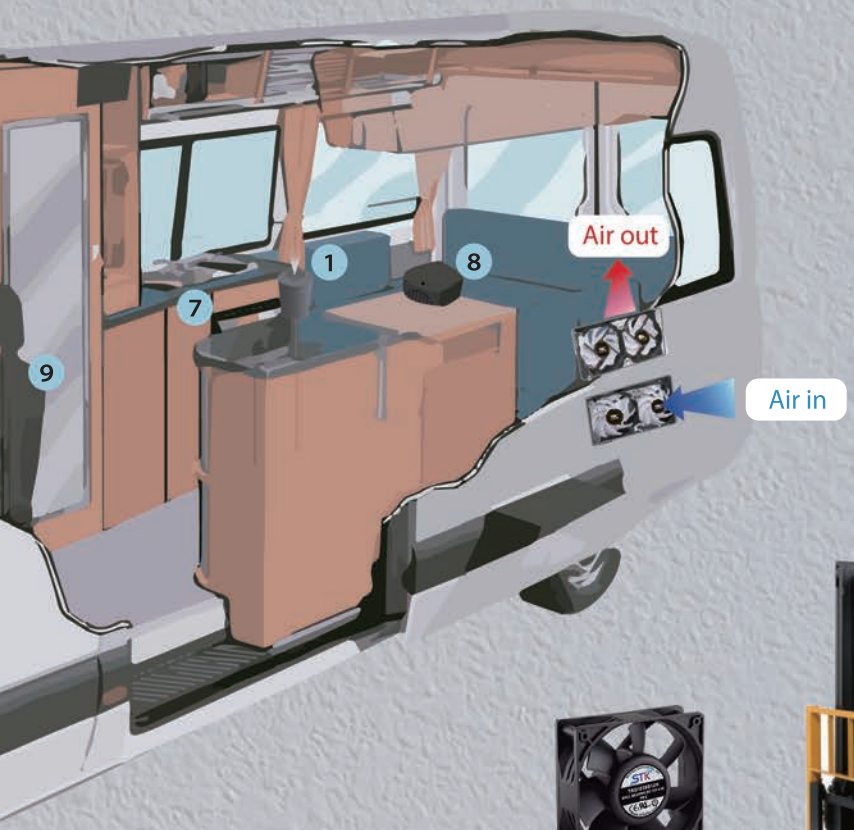

露營車用風扇
Camper Fan

> STK-0925

> STK-1225

> STK-1425

堆高機冷排散熱
Stacker's condenser Fan
特殊電壓設計DC 80V
Special DC voltage design 80V

> TRD12038

> TRD8038

充電樁
Car Charging Station

9 座椅散熱墊
Seat Cushion

8 車用空氣淨化器
Car air purifier

Fan Application In Daily Life

Living Room

L'A ARSON NUOVA

RUNNING MACHINE

TRF8025

FRAGRANCE MACHINE

TRS6015

VR

TRS6010

HANDHELD CONSOLE

TRS2010

ROUTER

TRS4015

PROJECTOR

TRS6020

AIR PURIFIER

TRB20060

WASHLET

TRB7530

ROBOT VACUUM

TRB5020

Fan Application In Business

Fan Application In Industry

TRD8025
LED DISPLAY
DISK ARRAY
TRS4028
SFA1804
CAMERA DRONE
MONITORING SYSTEM
TRS6020
TRD9225
BASE STATION

Bearing and Life

Life expectancy is one of the most important factors of fan's performance. Bearing system and the working environment decide the main concern of fan's life expectancy.
STK FAN provide three bearing systems. The table lists the bearing types and their life expectancy under normal working environment.

Bearing Type	Life Expectancy	LIFE	Price
Sleeve bearing	30000hrs at 40℃	3rd	low
WRB bearing by STK	50000hrs at 40℃	2nd	middle
BALL bearing	70000hrs at 40℃	1st	high

WRB (Wearable) bearing is an oil-leakage-proof bearing exclusively designed by STK, which allows lubricating oil to circulate, and the outer frame is integrally formed to seal the oil storage, which greatly improves the shortcomings of traditional oil-sealed bearings.

Water Proof Technology

Parylene uses chemical vapor deposition (CVD). The whole process is a gaseous reaction, and the whole process is carried out under vacuum conditions, so the coating is very uniform, which is difficult to achieve with other coating methods. According to the international standard EN60529/IEC529, the highest waterproof level can reach IP68.

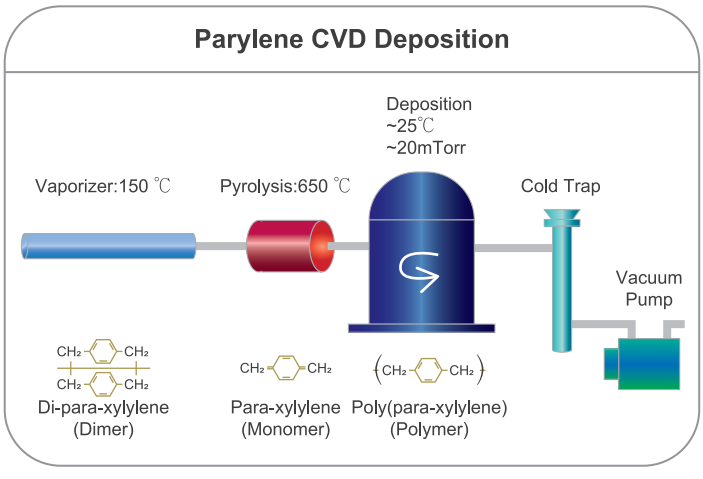

Parylene 沉積原理：

Parylene採用化學氣相沉積工藝（CVD）。整個過程是氣態反應，且全程在真空條件下進行，塗層非常均勻，此特性是其它塗敷方式難以實現的。依國際規範標準EN60529/IEC529，防水等級最高可達IP68。

Ingress Protection 侵入保護

由歐洲電工標準化委員會 (CENELEC) 在歐盟發佈為 EN 60529。等級由兩位數組成。第一個數字是指對固體物體的防護，等級從 0（無防護）到 6（無灰塵進入）。
第二個數字對外殼的液體防護等級進行評級，並使用從 0（無防護）到 8（不同角度的高壓熱水）的等級。
Published in the European Union as EN 60529 by the European Committee for Electrotechnical Standardization (CENELEC).
The rating consists of two digits. The first number refers to the protection against solid objects on a scale from 0 (no protection) to 6 (no ingress of dust). The second number rates the enclosure's level of protection against liquids and uses a scale from 0 (no protection) to 8 (high pressure hot water at various angles).

國際規範標準 International standard
EN60529 / IEC529

I P X X

SOLID | 防塵等級

- **0** 沒有保護 without protection
- **1** 可抵擋直徑大於 50mm 的固體入侵
  protected against a solid object greater than 50mm such as a hand.
- **2** 可抵擋直徑大於 12.5mm 的固體入侵
  protected against a solid object greater than 12.5mm such as a finger.
- **3** 可抵擋直徑大於 2.5mm 的固體入侵
  protected against a solid object greater than 2.5mm such as a screwdriver.
- **4** 可抵擋直徑大於 1mm 的固體入侵
  protected against a solid object greater than 1mm such as a wire.
- **5** 有限的灰塵進入，防止灰塵堆積
  Dust protected. Limited ingress of dust permitted. Will not intefere with operation of the equipment. Two to eight hours.
- **6** 防止灰塵進入，完全防塵效果
  Dust tight. No ingress of dust. Two to eight hours.

WATER | 防水等級

- **0** 沒有保護 without protection
- **1** 防垂直滴水保護，長達 10 分鐘
  protected against vertically falling drops of water. Limited ingress permitted.
- **2** 防傾斜 15° 滴水保護，長達 10 分鐘
  protected against vertically fallingdrops of water with enclosure tilted up to 15 degrees from the vertical. Limited ingress ermitted.
- **3** 防噴灑保護，長達 5 分鐘
  Protected against vertically falling drops of water. Limited ingress permitted.
- **4** 防濺水保護，長達 3 分鐘
  Protected against sprays of water up to 60 degrees from the vertical. Limited ingress permitted for 3 minutes..
- **5** 防低壓水柱噴射保護，至少維持 3 分鐘
  Protected against jets of water. Limited ingress permitted.
- **6** 防重力噴射保護，至少維持 3 分鐘
  water from heavy seas or water protected in powerful jets shall not enter the enclosure in harmful quantities.
- **7** 能夠處於 1 米水深，長達 30 分鐘
  Protection against the effects of immersion in water between 15 cm and 1M for 30 minutes.
- **8** 能夠超過 1 米水深長期浸泡，實際使用 時間視乎製造商而定
  Protection against the effects of immersion in water under pressure for long periods.

Appearance and Used Screws

Various Frame Designs

無柱框
FLANGE TYPE

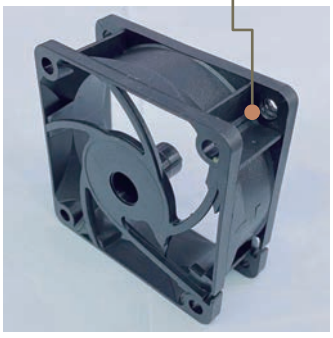

有柱框
RIB TYPE

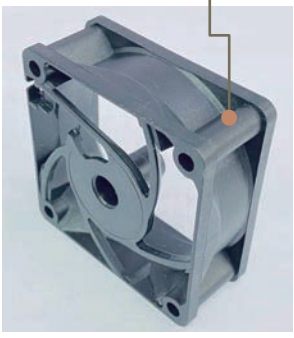

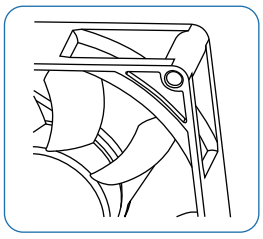

Ribbed (4 Holes)
有柱框

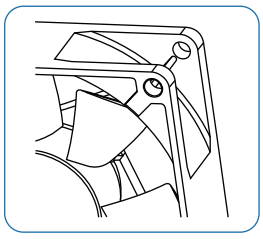

Ribless (8 Holes)
無柱框

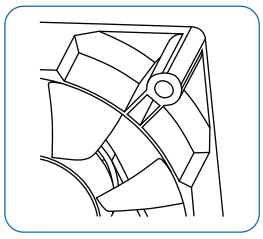

Single Ribbed (4 Holes)
單面有柱框

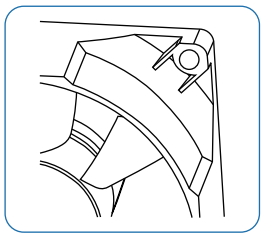

Open Flange (4 Holes)
單面無柱框

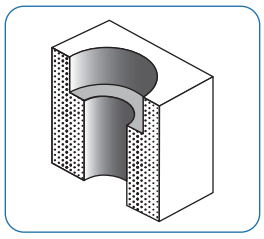

Counterbore of Frame
沉頭孔

Commonly used screws

a.自攻螺絲
Self-tapping screws

b.機械螺絲&螺帽
Machine screw

無柱框 FLANGE

自攻螺絲(✓) / 機械螺絲&螺帽(X)
Self-tapping screws(✓) / Machine screw(X)

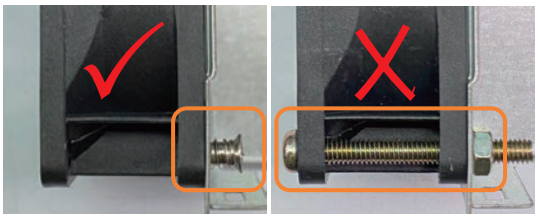

有柱框 RIB TYPE

自攻螺絲(✓) / 機械螺絲&螺帽(✓)
Self-tapping screws(✓) / Machine screw(✓)

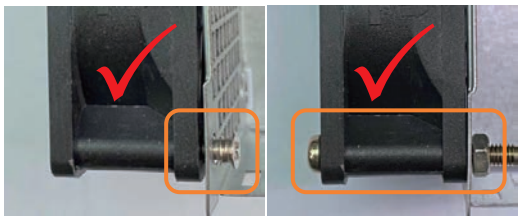

螺絲孔徑 (Screw hole diameter)：4.4±0.1 mm

螺絲類型 Screw Type	螺絲規格 Specification	扭力 Torque	備註 PS
自攻螺絲 Self-tapping screws	M4.8/M5	4.5 kgf.cm	適用於無柱框 suitable for FLANGE TYPE
機械螺絲 Machine screw	M4	7.5 kgf.cm	適用於有柱框 suitable for RIB TYPE

Professional Terms List

保護方式 Protection

專業名詞 Specialized word	解 釋 Definition	參考文獻 Reference
RP	Reverse Protection的縮寫，正負極反接保護(自帶極性保護二極管)，防止正負極接反而燒毀風扇	
C	Auto restart ，轉子鎖定保護，自動重啟功能	F1
SS	Soft Start的縮寫，軟啟動，電流及轉速緩慢上升	F2
CL	Current Limit的縮寫，限流保護	

信號輸出方式 Signal output

專業名詞 Specialized word	解 釋 Definition	參考文獻 Reference
FG	Frequncy Generator的縮寫，頻率發生器，用來偵測風扇轉速	F3
RDH	Rotation Generator的縮寫，運轉狀態偵測，停轉高電平報警	F4
RDL	Rotation Generator的縮寫，運轉狀態偵測，停轉低電平報警	F4
LD	Low Detection的縮寫，轉速低於極限值輸出高電平報警	F5

調速方式 Speed Control

專業名詞 Specialized word	解 釋 Definition	參考文獻 Reference
PWM	Pluse wide modulation的縮寫，固定頻率，占空比調速	F6
TC	Temperature Control的縮寫，溫度控制轉速	F7
RC	Risistor Control的縮寫，電阻(通常情況下用電位器)控制轉速	F8
VC	Voltage Control的縮寫，電壓信號控制轉速	F9
CS	Constant Speed的縮寫，達到額定電壓後恆定轉速	F10

信號輸出標準接口電路｜Signal output standard interface circuit diagram

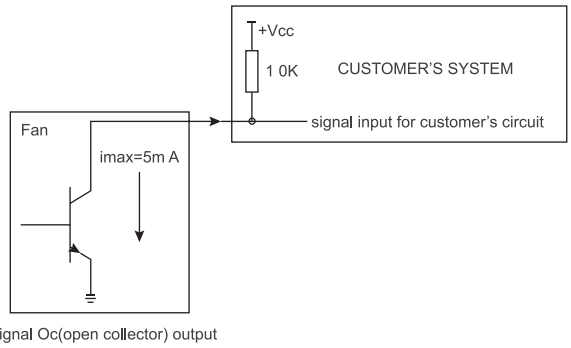

Signal Oc(open collector) output

PWM輸入標準接口電路｜PWM input standard circuit diagram

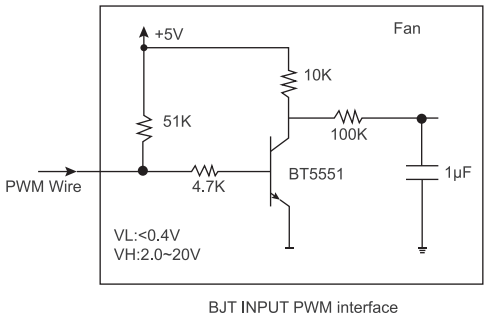

BJT INPUT PWM interface

VC(電壓訊號調速)輸入標準接口電路｜VC input standard diagram

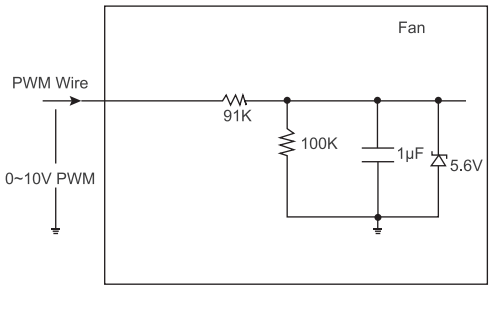

RC(可調電阻)輸入標準接口電路｜RC input standard diagram

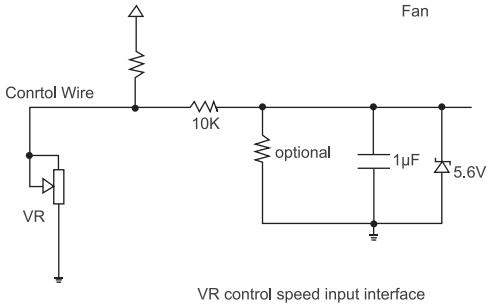

VR control speed input interface

AS and SS Function Introduction

F1 | C 自動重啟 (Auto Restart)

當轉子受外力作用被堵轉，風扇內部自動斷電（即電流降到很低），進行保護。每隔3~5秒鐘後自動重新判斷是否繼續受阻，直到外力解除後重新啟動運轉。
The motor can auto-power off when rotor is locked at rated voltage for 1 sec to protect itself. Then the circuit attempts to restart in 3 to 5 sec until the force released.

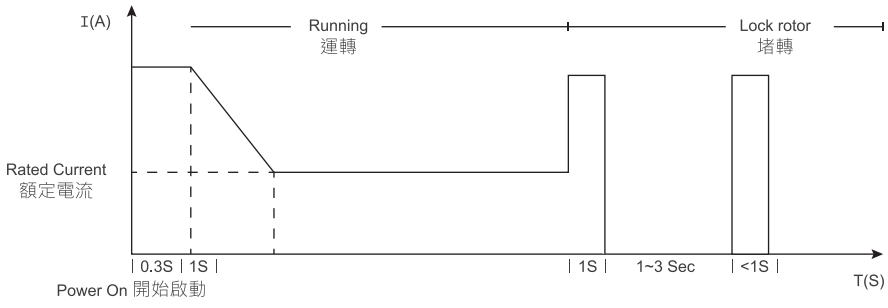

without SS function 不帶SS功能

F2 | SS 軟啟動 (Soft Start)

Soft Start 軟啟動，又稱緩啟動或防沖擊電流保護IR功能(Inrush current protection)。
Difinition：Soft Start(also called Inrush Current Protection).
軟啟動功能是指風機上電，轉速從零緩慢上升到額定轉速，大約需要3-10秒鐘；電流因此也是從零開始緩慢上升到額定的電流範圍。
SS means fan electricity, rotate speed from zero to the rated speed will cost 3-10 seconds; also current is up to the rated range from zero slowly.
軟啟動對於大風機的作用在於：由於風機內部定子由線圈與電子驅動構成，線圈乃屬感性負載。剛通電時扇葉由靜止到全速運轉，流過線圈的電流特別大（剛啟動瞬間線圈感抗就等於線圈純直流電組），此時的沖擊電流在額定電流的3-5倍以上, (如額電流在1A左右，沖擊電流會在3-5A以上).這樣一來，對客戶的電源沖擊能力就要求過高，例於選用額定電流為48V，1A的風機，電源功率得48V*5A=240W以上。帶軟啟動的風扇，電流不會衝擊到如此之高，最高電流就等於額定電流的+10%左右；例如48V 1A 的風扇,只需要50W以上即可(當然依具體情況留一定的餘量)。50W的電源與240W的電源相比，成本及占用空間有明顯差距，從這個角度上，使用帶軟啟動的風扇在整體成本上有所優勢，且節能。另外，帶軟啟動的風扇衝擊電流小，對風扇內部器件危害小，性能更安全。
SS role in the big fans is: because the stator is consist of the coil and electronic drives, and the coils belong to perceptual load. At the beginning of fan electricity, there is a great of current trough the coils when the blades from static to full speed. (At the start moment the inductive reactance is as much as the pure dc resistance). At this time the impulse current is 3-5 times to the rated current (E.G current is 1A, the impulse current will be 3-5A) so it is a high requirement to the customer's power impulse ability.
For example, the fan with rated current 48V, 1A, the power consumption will up to 48V*5A=240W. The fans with SS, only need 50W (According to the specific situation it will keep some margins). Compare 50W power with 240W power, there's an obvious difference between the costs and spaces. In this situation, it offers advantages to use the fans which with SS function, and efficient. Other way, the fans with SS function have small impulse current, on the inside devices little harm and safer.

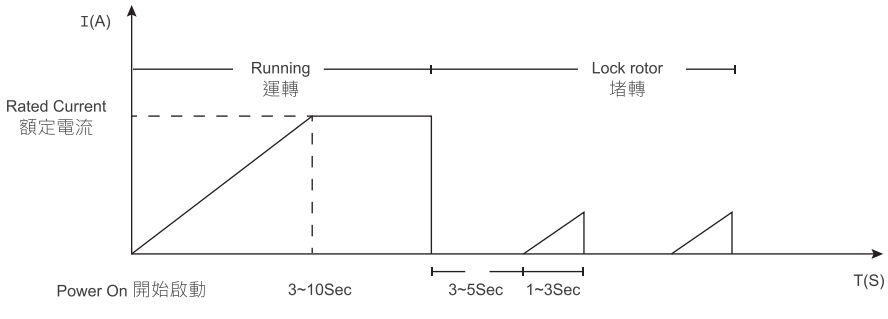

with SS function 帶SS功能

FG and RD · LD Function Introduction

F3 | FG 頻率發生器 (Frequncy Generator)

風扇運轉時，轉子的N，S極切換會產生高低電平變化，越轉越快，電平變化也就越快。從而可以通過變化的頻率來偵測風扇的轉速。

FG(Frequncy Generator)
When fan is running, the switch of rotor N, S can make exchange of high and low level. And speed faster, the frequency of level exchange faster. So we can sense fan's rotation speed via the signal of variational frequency.

Rpm/min=frequency of square wave*(120*poles)

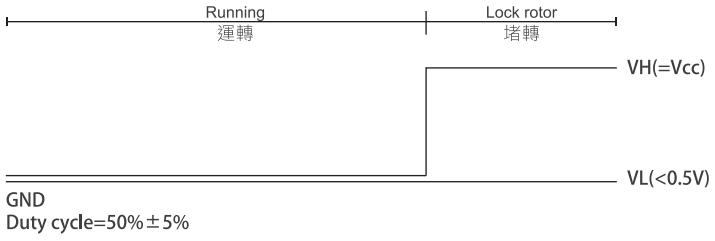

F4 | RD 運轉狀態監測，堵轉報警 (Rotation Detection)

RD (RDH)運轉時候信號引腳輸出低電平，轉子堵住時輸出高電平；RDb(RDL)與此相反。外部設備通過檢測高低電平的判斷來分辨該風扇是處於運轉狀態，還是非運轉狀態。

RD(Rotation Detection)
RD(RDH):When running, output low level; when locked, output high level; RDb(RDL):Just contrast. When running, output high level; when locked, output low level; External equipment will distinguish the fan is working or not through the inspection of high and low level.

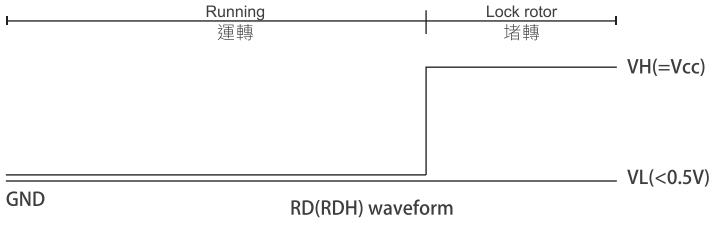

RD(RDH) waveform

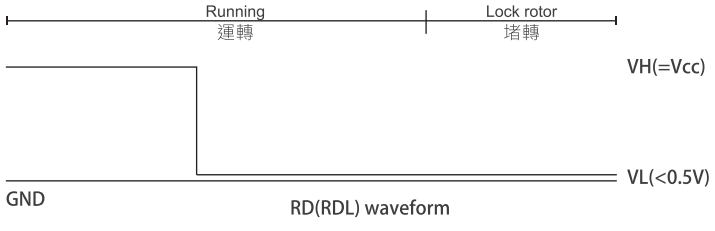

RD(RDL) waveform

F5 | LD 轉速低於設定值報警 (Low Detect)

Difinition：Low Detect, Output alerting signal when the rotate speed is below the setting.
LD的功能：風扇轉速低於設定的極限轉速時輸出高電平警報信號，如某規格的風扇轉速標準為5000RPM;可設定70%以下轉速時(即低於3500RPM)開始報警。(該極限轉速值可由客戶決定，一般默認為低於70%額定的轉速開始報警)。
It means that the fan will output the high level alerting signal when the rotational speed lower than the limit speed which was setted before.
For example, one kind of fan's normal speed is 5000 RPM, we can set it to start alerting when its speed is lower than 70% of it(below 3500RPM).
(The limit speed could be charged by customers, generally the default is that it starts alerting when the speed is lower than 70% of its rated speed).

該功能與RD報警信號的不同在於：RD功能只要風扇在運轉，不論轉速多少，只要不停轉就不報警，而LD功能是轉速低於沒設定值時就報警 。
風扇使用時間長了，軸承組合之間，或定子與轉子間難免會有灰塵，這樣一來可能會導致風扇轉速的降低，當然元器件的不良也可能導致轉速降低。這樣一來，如果是使用的RD功能則不會報警提示，但是使用LD功能，則會報警提示更換該風機，以免風機轉速過低無法散熱造成設備溫升過高，而工作不正常。
The difference between LD and RD is: For RD ones, as long as the fan is working, no matter what the speed is, it starts warning only when the fan out of working. But LD starts warning when the speed is lower than the given speed.
Long time using the fans, it is hard to avoid dust between the bearing unit assembling, the stators and rotors. It will lead to the fan's speed reduced, certainly the problem of components also may lead to the results. In this situation, if use the RD it will not be warned, but in use of LD, it will warn to change the fan in order to avoid the equipment's temperature too high by the fan's lower speed that make the unusual working.

RD與LD功能的工作示意圖如右圖所示：
The RD and LD's work schemes as the chart:

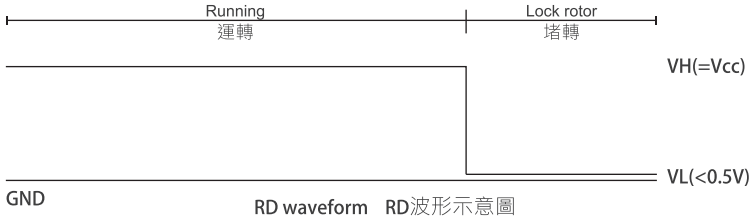

RD waveform RD波形示意圖

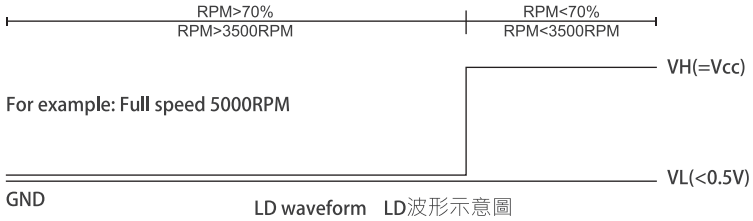

LD waveform LD波形示意圖

F6 | PWM 調速功能 (Pulse Width Modulation)

PWM 控制調速(Pulse Width Modulation)脈沖寬度調速，頻率可從20Hz-30KHz。高電平電壓範圍可以從2.5V-20V，低電平範圍≦0.5V。該調速是通過固定頻率的變脈，調整其寬度（也就是占空比 Duty cycle）來改變風扇轉速。
6種常見曲線模式如下圖所示，當然還可依客戶制定，占空比vs轉速的關係。
PWM control, Pulse Width Modulation. Frequency can be from 20HZ~30KHZ. High-level voltage is from 2.5~20V, and low-level≦0.5V. This control vias variational pulse of fixed frequency to adjust its width (Duty cycle) and then alters speed. Of course, we can work out the relation of duty cyscle and Voltage according to

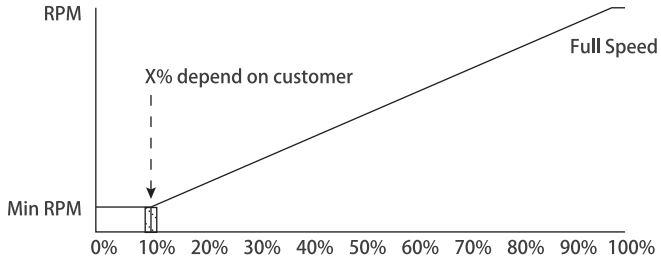

PM1

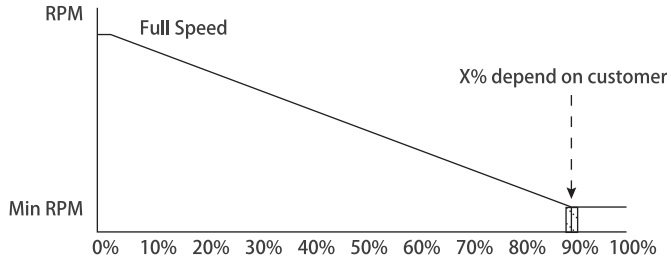

PM4

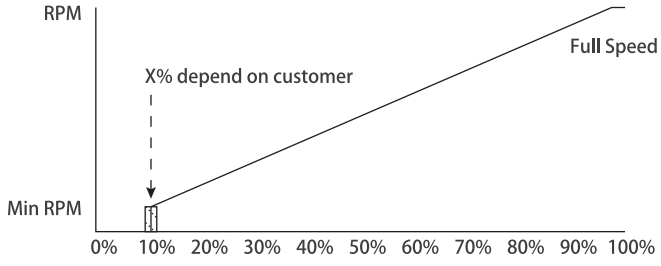

PM2

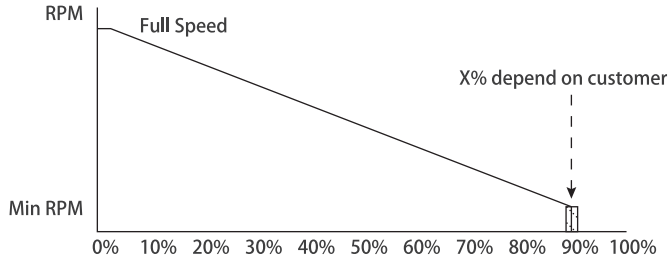

PM5

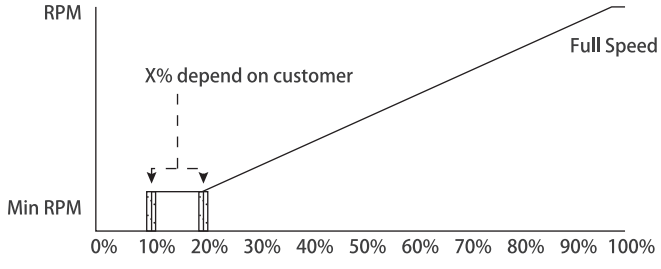

PM3

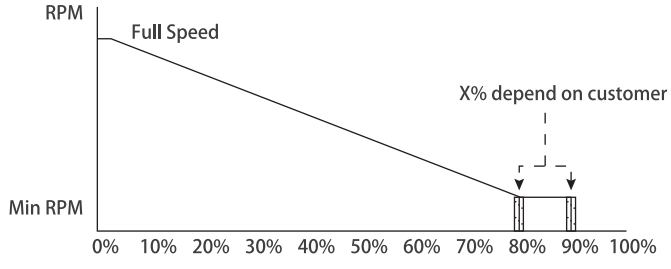

PM6

F7 | TC 調速功能 (Temperature Control)

TC控制調速(Temperature Control)溫控功能風機，風機的轉速受溫度控制，不同的溫度可對應不同的轉速（溫度Sensor可在風機內掛或通過引出線的方式外掛）。常見的3種曲線，如下圖所示:
TC (Temperature Control): Speed is controlled by temperature. Different temperature corresponds different speed (Temperature sensor can be filled inside or connected outside as lead wires).There are three normal curves showed below:

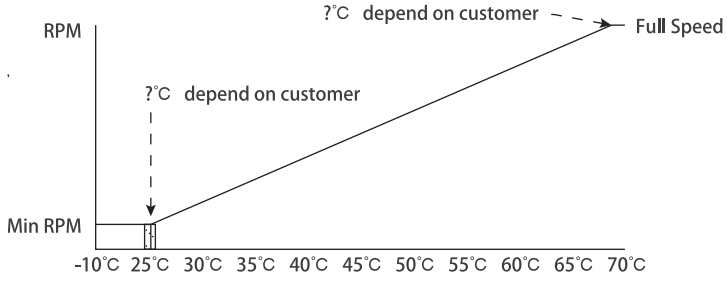

TM1

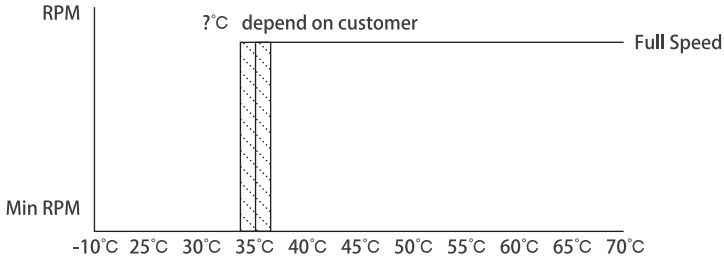

TM2

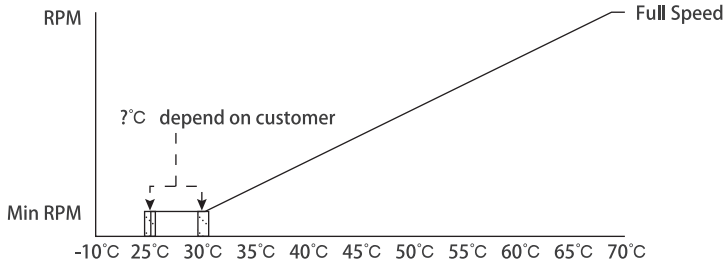

TM3

F8 | RC 電阻調速 (Resistor Control)

通過改變風機外掛電阻的阻值(一般用可調電阻)來改變風機轉速，及不同的電阻值對應不同的轉速。（一般建議用10K可調電阻）常見的3種調速方式如下圖所示：
RC(Resister Control)
When we adjust the resistivity of resistance(usually use adjustable resistor), the speed will be changed. The means different resistivity and different speed. And we suggest to use 10K. And we suggest to use 10K adjustable resistor. There are three common ways to regulate speed:

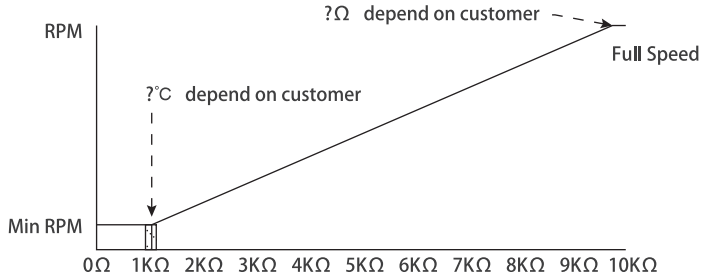

RM1

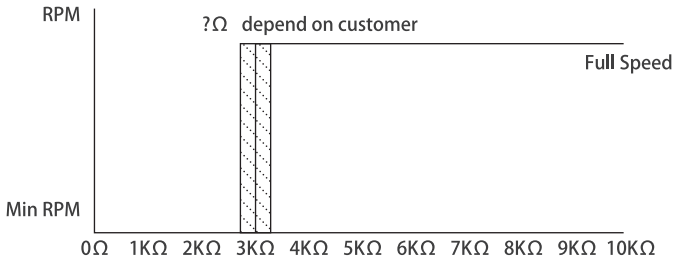

RM2

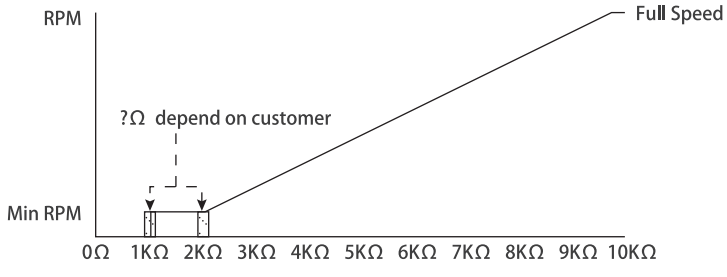

RM3

F9 | VC 模擬電壓信號調速 (Voltage Signal Control)

轉速依電壓信號高低來控制風扇之轉速，不同的輸入電壓可對應不同的轉速，電壓信號一般可設定範圍為0-20V之間，一般推薦使用0-5V，控制信號電壓消耗電流≦1Ma，常見的6種曲線，如下圖所示：

VC mode (Voltage Signal Control)

Speed is controled by voltage signal. Different input volt and difference speed. Usually the range of volt signal is at 0~20V, but we suggest 0~5V. And the voltage of signal control uses up current≦1 Ma. There are six common curves below:

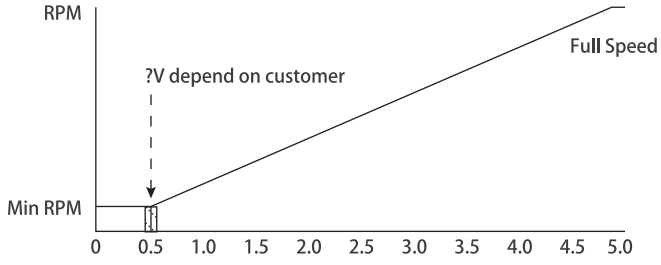

PM1

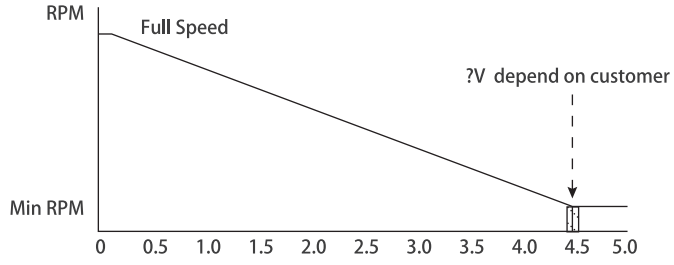

PM4

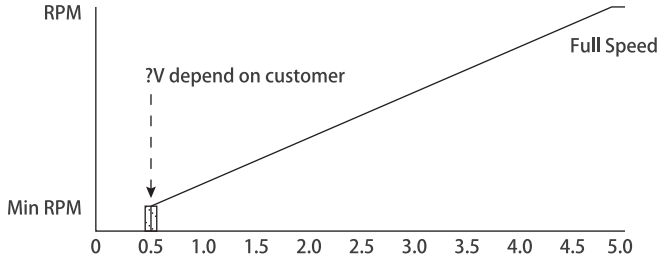

PM2

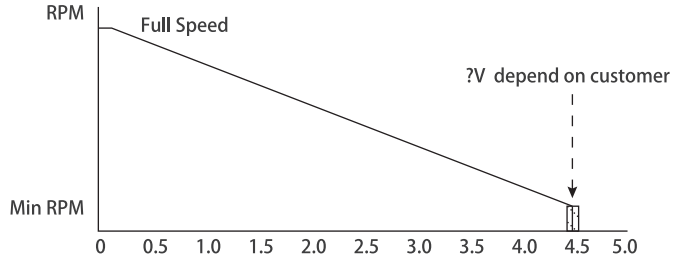

PM5

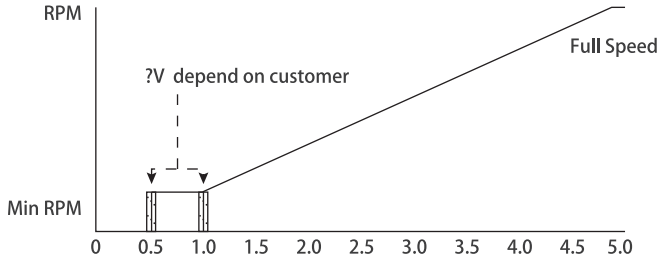

PM3

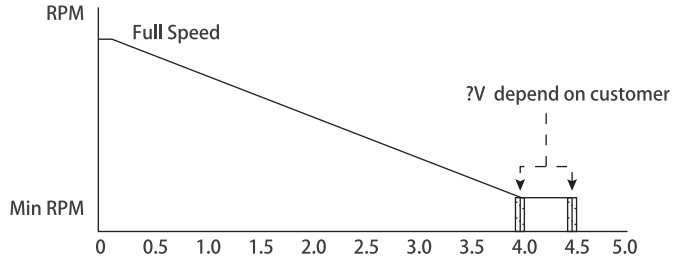

PM6

F10 | CS恒速功能 (CS Function)

恒速是指風機在額定電壓至該風機的最高承受的電壓範圍內，轉速保持不變（如48V風扇，上限電壓為72V,那麼只要供電壓在48V-72V之間時，風扇保持額定轉速不變。
普通的風扇(不帶恒速功能的)，轉速隨電壓的升高而升高，同時電壓也隨之升高，同樣噪音也隨之升高。當電壓有波動時，轉速就不穩定，電流即噪音忽高忽低。在一些寬電壓範圍的應用上，普通風扇不太適用，如12038風扇，48V/1A/5000RPM的風扇，在上線電壓72V時，轉速約為8000RPM以上，電流在2.2A以上，噪音在65DB以上，這樣一來，轉速上升，功率增大，電流升高，風扇內部問度過高，壽命也就相應下降，長期以來，器件也容易損壞，這樣不利於節能，低噪音即長壽命的重要性能指標。帶恒速能功能的風扇，因在允許的電壓範圍內轉速不變，噪音也就不變，功率不變，有利於實現節能，低噪音，長壽命的時代需求。一般通訊設備，電壓範圍從36V-72V間切換，提倡使用CS功能風扇。不帶CS功能的風扇與帶CS功能的風扇其轉速,功率,電流,噪音,溫升,壽命對應其電壓的關係曲線如下圖所示：
“Constant Speed” It is mean that the speed remain the same at range between rated voltage to the highest voltage it can undertake. For example, a 48V fan, its limit voltage is 72V, so when supply voltage changes between 48V~72V, speed would remain at rated.
But for normal fans, voltage higher and speed higher, at the same time, current higher, noise level higher. If voltage isn’t steady, speed, current and noise level are high and low. So normal fans are not suitable for wide voltage range using. 120 x 120 x 38mm fan, 48V/ 1A/5000RPM, when it limit voltage 72V, speed will reach 7000rpm, and current is 2.2A at least, noise not lower than 65DB. Then the power is too high, and inner temperature too high also, the life expentance will be shorter. For a long time, components are easy to break. It affects fan’s reliability. If fan with CS function, in allowed voltage range, the speed, noise, power are all remain the same. It meets inevitable demand of the times, energy conservation, low noise, long life. For normal communication apparatus, its voltage switch between 36V-72V, so we suggest customers to use fan with CS function in it. PLS see the below curve showed differences between normal fans and CS fans on speed, power, current, noise,inner, temperature, life expectance etc.;

with CS Function 帶恒速功能

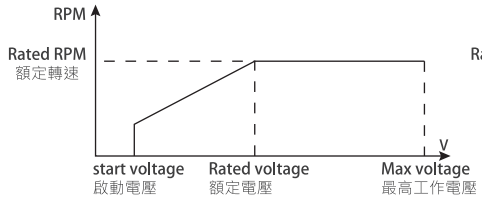

RPM V.S VOLTAGE
轉速對應電壓

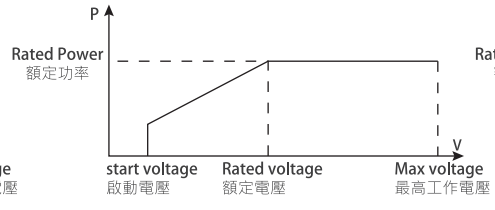

POWER V.S VOLTAGE
轉速對應電壓

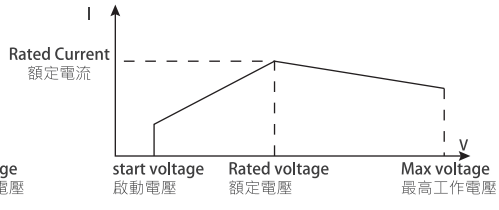

CURRENT V.S VOLTAGE
電流對應電壓

without CS Function 無恒速功能

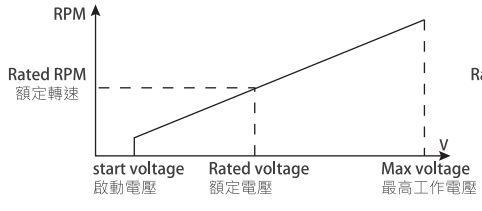

RPM V.S VOLTAGE
轉速對應電壓

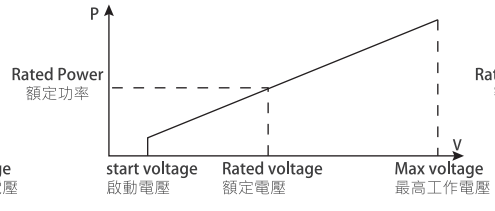

POWER V.S VOLTAGE
轉速對應電壓

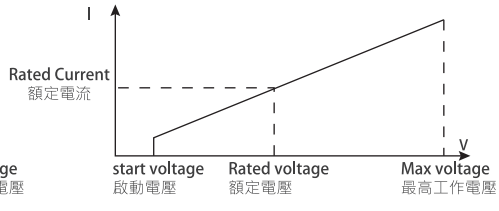

CURRENT V.S VOLTAGE
電流對應電壓

with CS Function 帶恒速功能

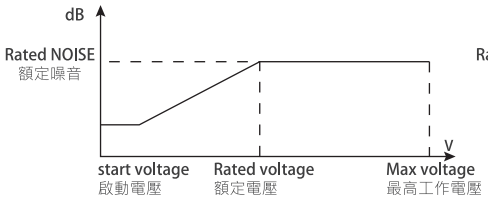

NOISE V.S VOLTAGE
噪音對應電壓

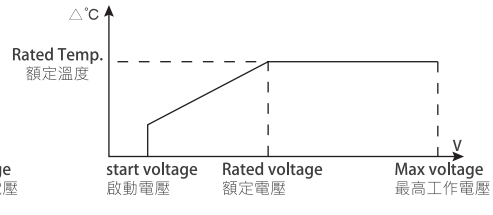

TEMPERATURE RISE V.S VOLTAGE
溫升對應電壓

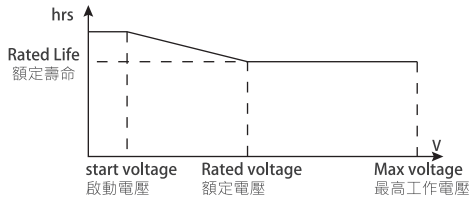

LIFE V.S VOLTAGE
壽命對應電壓

without CS Function 無恒速功能

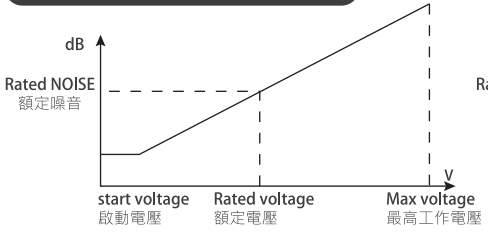

NOISE V.S VOLTAGE
噪音對應電壓

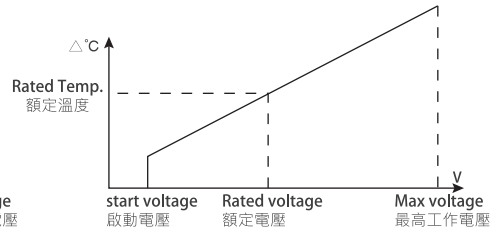

TEMPERATURE RISE V.S VOLTAGE
溫升對應電壓

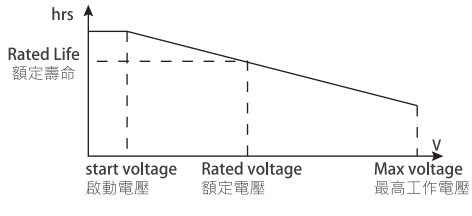

LIFE V.S VOLTAGE
壽命對應電壓

DC Axial Fan
SFA1305 13X13X5mm

- Frame：Thermoplastic PBT UL94-V0
  外框材質：環保防火PBT
- Impeller：Thermoplastic PBT UL94-V0
  扇葉材質：環保防火PBT
- Bearing：★WRB Bearing
  軸承：★WRB軸承
- Unit Weight：1.17g
  風扇單體重量：1.17克

P&Q Curve | At Rated Voltage

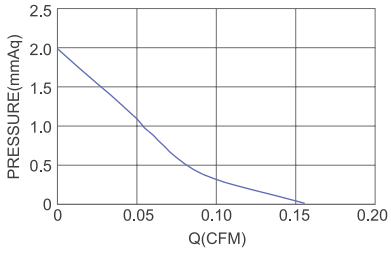

DIMENSIONS DRAWING | UNIT：mm

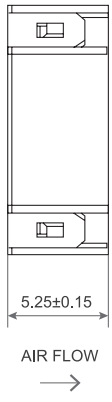

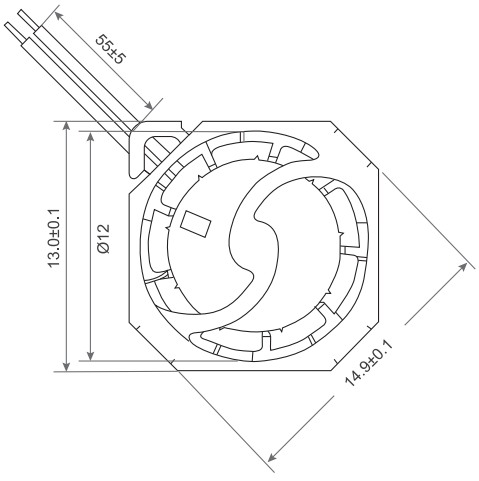

Model No.	Bearing Type	Voltage (VDC)	Current (mA)	Power (W)	Speed (RPM)	Air Flow (CFM)	Air Flow (m^3/min)	Air Pressure (mmH2O)	Air Pressure (Inch H2O)	Noise (dBA)
SFA1305	★	3.3 (2.8~3.6)	39.0	0.13	16000	0.16	0.005	1.98	0.078	15.7

DC Axial Fan
SFA1504 15X15X4mm

- Frame：Thermoplastic PBT UL94-V0 & Alumium
  外框材質：環保防火PBT及鋁蓋
- Impeller：Thermoplastic PBT UL94-V0
  扇葉材質：環保防火PBT
- Bearing：WRB Bearing
  軸承：WRB軸承
- Unit Weight：1.27g
  風扇單體重量：1.27克

P&Q Curve | At Rated Voltage

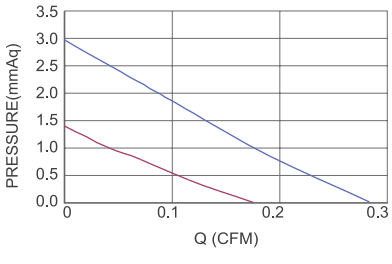

DIMENSIONS DRAWING | UNIT：mm

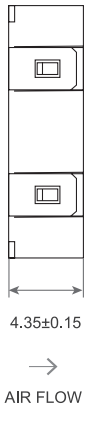

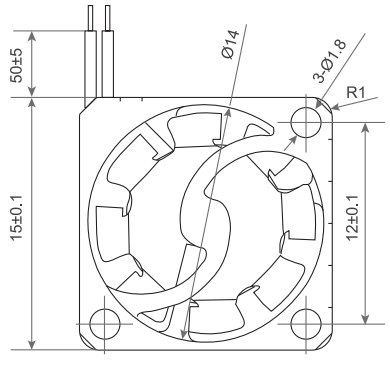

Model No.	Bearing Type	Voltage (VDC)	Current (mA)	Power (W)	Speed (RPM)	Air Flow (CFM)	Air Flow (m^3/min)	Air Pressure (mmH2O)	Air Pressure (Inch H2O)	Noise (dBA)
SFA1504U	★	2.4 (2.4~3.3)	11.0	0.30	7500	0.18	0.005	0.69	0.027	14.6
SFA1504-3	★	3.3 (2.8~3.6)	20.0	0.07	11000	0.28	0.008	1.39	0.055	18.0
SFA1504-5	★	5.0 (4.5~5.5)	30.0	0.15	16000	0.12	0.003	2.96	0.117	23.7

X Bearing System ※：Sleeve ★：WRB ◎：Ball

★如果您需要的轉速或電壓或功能不在這份清單上，請與我們業務聯繫 Please contact us, if the SPEC you need is not in the list.

★產品詳細數據及功能請參閱承認書 Please see the approval sheet for more information . ★產品規格變更不另行通知 Specifications are subject to change without notice.

DC Axial Fan
SFA1708 17X17X8mm

- Frame：Thermoplastic PBT UL94-V0
  外框材質：環保防火PBT
- Impeller：Thermoplastic PBT UL94-V0
  扇葉材質：環保防火PBT
- Bearing：★WRB Bearing
  軸承：★WRB軸承
- Unit Weight：2.06g
  風扇單體重量：2.06克

P&Q Curve | At Rated Voltage

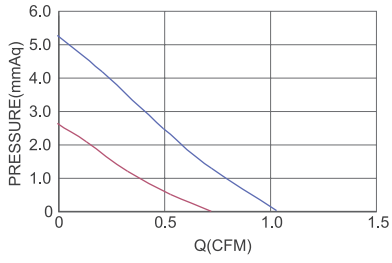

DIMENSIONS DRAWING | UNIT：mm

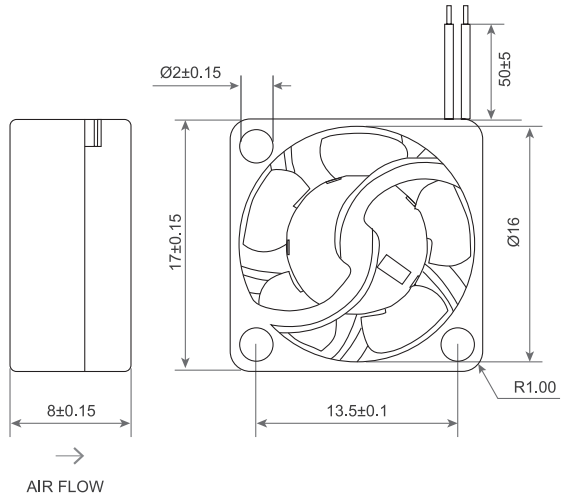

Model No.	Bearing Type	Voltage (VDC)	Current (mA)	Power (W)	Speed (RPM)	Air Flow (CFM)	Air Flow (m^3/min)	Air Pressure (mmH₂O)	Air Pressure (Inch H₂O)	Noise (dBA)
SFA1708-3	★	3.3 (2.8~3.6)	50.0	0.17	11000	0.72	0.020	2.63	0.104	16.5
SFA1708-5	★	5.0 (4.5~5.5)	70.0	0.35	16000	1.03	0.029	5.26	0.207	26.8

DC Axial Fan
SFA1804 18X18X4mm

- Frame：Thermoplastic PBT UL94-V0 & Alumium
  外框材質：環保防火PBT及鋁蓋
- Impeller：Thermoplastic PBT UL94-V0
  扇葉材質：環保防火PBT
- Bearing：WRB Bearing
  軸承：WRB軸承
- Unit Weight：1.63g
  風扇單體重量：1.63克

P&Q Curve | At Rated Voltage

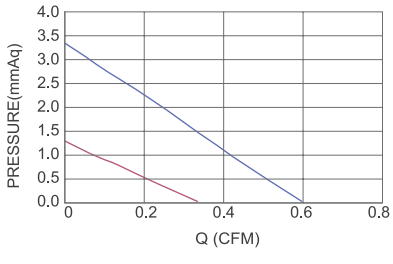

DIMENSIONS DRAWING | UNIT：mm

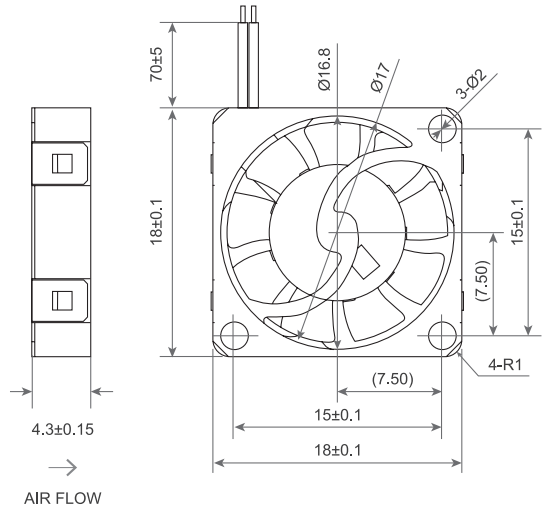

Model No.	Bearing Type	Voltage (VDC)	Current (mA)	Power (W)	Speed (RPM)	Air Flow (CFM)	Air Flow (m^3/min)	Air Pressure (mmH₂O)	Air Pressure (Inch H₂O)	Noise (dBA)
SFA1804-3	★	3.3 (2.8~3.6)	27.0	0.09	7500	0.33	0.009	1.27	0.050	15.9
SFA1804-5	★	5.0 (4.5~5.5)	40.0	0.20	13000	0.58	0.016	3.34	0.132	24.9

Ⓧ Bearing System ※：Sleeve ★：WRB ◎：Ball

★如果您需要的轉速或電壓或功能不在這份清單上，請與我們業務聯繫 Please contact us, if the SPEC you need is not in the list.

★產品詳細數據及功能請參閱承認書 Please see the approval sheet for more information . ★產品規格變更不另行通知 Specifications are subject to change without notice.

DC Axial Fan

TRS2006 U SERIES 20X20X6mm

- Frame：Thermoplastic PBT UL94-V0
  外框材質：環保防火PBT
- Impeller：Thermoplastic PBT UL94-V0
  扇葉材質：環保防火PBT
- Bearing：※Sleeve・★WRB Bearing
  軸承：※含油・★WRB軸承
- Unit Weight：3.5g
  風扇單體重量：3.5克

P&Q Curve At Rated Voltage

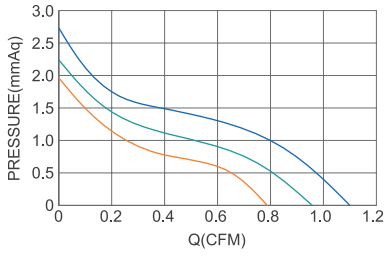

DIMENSIONS DRAWING UNIT：mm

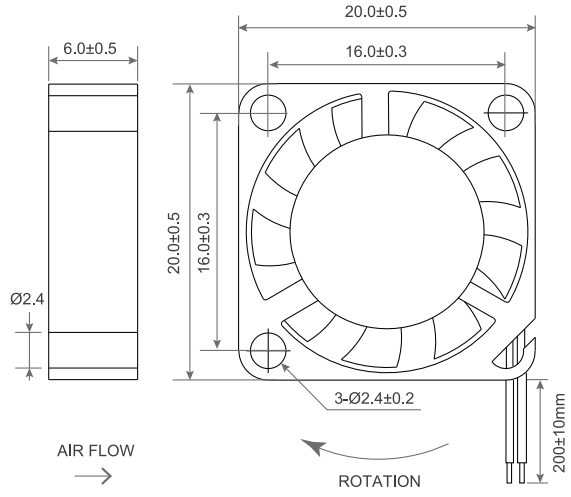

Model No.	Bearing Type	Voltage (VDC)	Current (A)	Power (W)	Speed (RPM)	Air Flow (CFM)	Air Flow (m^3/min)	Air Pressure (mmH_2O)	Air Pressure (Inch H_2O)	Noise (dBA)
TRS2006x05L	※★	5 (3.0~6.0)	0.08	0.40	8000	0.79	0.022	1.95	0.08	21.5
TRS2006x05M	※★	5 (3.0~6.0)	0.12	0.60	10000	0.95	0.027	2.22	0.09	25.6
TRS2006x05H	※★	5 (3.0~6.0)	0.16	0.80	12000	1.12	0.032	2.69	0.11	31.2
TRS2006x12L	※★	12 (8.5~13.5)	0.04	0.48	8000	0.79	0.022	1.95	0.08	21.5
TRS2006x12M	※★	12 (8.5~13.5)	0.06	0.72	10000	0.95	0.027	2.22	0.09	25.6
TRS2006x12H	※★	12 (8.5~13.5)	0.10	1.20	12000	1.12	0.032	2.69	0.11	31.2

DC Axial Fan

TRS2010 SERIES 20X20X10mm

- Frame：Thermoplastic PBT UL94-V0
  外框材質：環保防火PBT
- Impeller：Thermoplastic PBT UL94-V0
  扇葉材質：環保防火PBT
- Bearing：※Sleeve・★WRB・◎Two Ball
  軸承：※含油・★WRB・◎滾珠軸承
- Unit Weight：6.0g
  風扇單體重量：6.0克

P&Q Curve At Rated Voltage

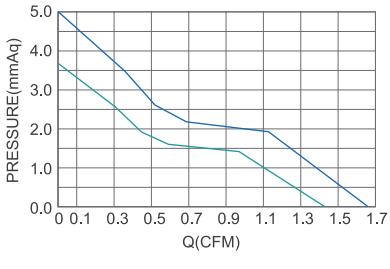

DIMENSIONS DRAWING UNIT：mm

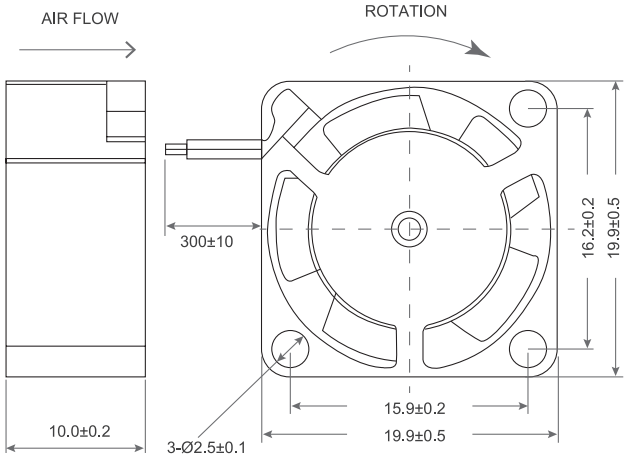

Model No.	Bearing Type	Voltage (VDC)	Current (A)	Power (W)	Speed (RPM)	Air Flow (CFM)	Air Flow (m^3/min)	Air Pressure (mmH_2O)	Air Pressure (Inch H_2O)	Noise (dBA)
TRS2010x05L	※★◎	5 (4.0~5.5)	0.06	0.30	10000	1.18	0.03	2.55	0.10	22.0
TRS2010x05M	※★◎	5 (4.0~5.5)	0.09	0.45	12000	1.42	0.04	3.67	0.14	23.0
TRS2010x05H	※★◎	5 (4.0~5.5)	0.13	0.65	14000	1.66	0.05	5.00	0.20	23.2

x Bearing System ※：Sleeve ★：WRB ◎：Ball

★如果您需要的轉速或電壓或功能不在這份清單上，請與我們業務聯繫 Please contact us, if the SPEC you need is not in the list.

★產品詳細數據及功能請參閱承認書 Please see the approval sheet for more information . ★產品規格變更不另行通知 Specifications are subject to change without notice.

DC Axial Fan

TRS2507 U SERIES 25X25X7mm

DIMENSIONS DRAWING UNIT：mm

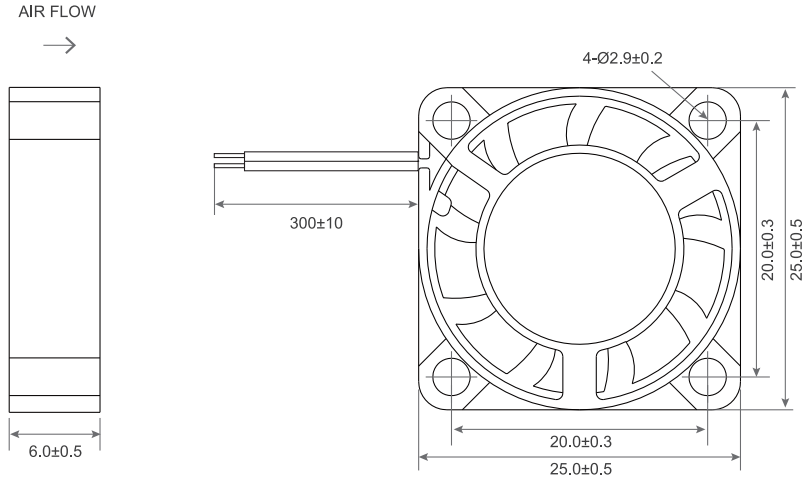

- Frame：Thermoplastic PBT UL94-V0
  外框材質：環保防火PBT
- Impeller：Thermoplastic PBT UL94-V0
  扇葉材質：環保防火PBT
- Bearing：※Sleeve・★WRB・◎Two Ball Bearing
  軸承：※含油・★WRB・◎滾珠軸承
- Unit Weight：5g
  風扇單體重量：5克

P&Q Curve At Rated Voltage

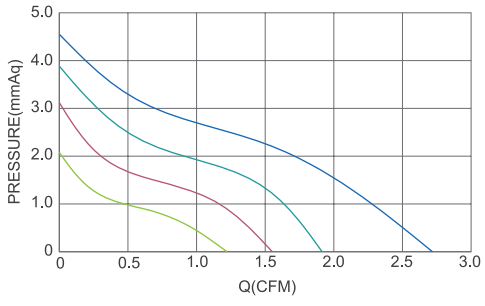

Model No.	Bearing Type	Voltage (VDC)	Current (A)	Power (W)	Speed (RPM)	Air Flow (CFM)	Air Flow (m^3/min)	Air Pressure (mmH2O)	Air Pressure (Inch H2O)	Noise (dBA)
TRS2507x05L	※◎★	5 (3.0~6.0)	0.14	0.72	7000	1.22	0.04	2.16	0.085	19.6
TRS2507x05M	※◎★	5 (3.0~6.0)	0.17	0.84	10000	1.55	0.04	3.10	0.122	23.5
TRS2507x05H	※◎★	5 (3.0~6.0)	0.19	0.96	14000	1.90	0.05	3.80	0.150	26.4
TRS2507x05VH	※◎★	5 (3.0~6.0)	0.22	1.08	17000	2.81	0.08	4.50	0.177	31.2
TRS2507x12L	※◎★	12 (8.5~13.5)	0.06	0.72	7000	1.22	0.04	2.16	0.085	19.6
TRS2507x12M	※◎★	12 (8.5~13.5)	0.07	0.84	10000	1.55	0.04	3.10	0.122	23.5
TRS2507x12H	※◎★	12 (8.5~13.5)	0.08	0.96	14000	1.90	0.05	3.80	0.150	26.4
TRS2507x12VH	※◎★	12 (8.5~13.5)	0.09	1.08	17000	2.81	0.08	4.50	0.177	31.2

x Bearing System ※：Sleeve ★：WRB ◎：Ball

★如果您需要的轉速或電壓或功能不在這份清單上，請與我們業務聯繫 Please contact us, if the SPEC you need is not in the list.

★產品詳細數據及功能請參閱承認書 Please see the approval sheet for more information . ★產品規格變更不另行通知 Specifications are subject to change without notice.

DC Axial Fan

TRS2510 SERIES 25X25X10mm

DIMENSIONS DRAWING UNIT：mm

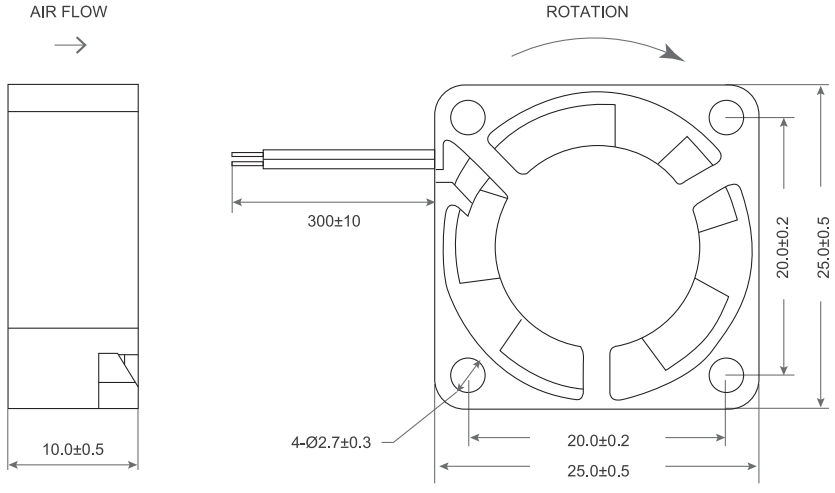

- Frame：Thermoplastic PBT UL94-V0
  外框材質：環保防火PBT
- Impeller：Thermoplastic PBT UL94-V0
  扇葉材質：環保防火PBT
- Bearing：※Sleeve・★WRB・◎Two Ball Bearing
  軸承：※含油・★WRB・◎滾珠軸承
- Unit Weight：6g
  風扇單體重量：6克

P&Q Curve At Rated Voltage

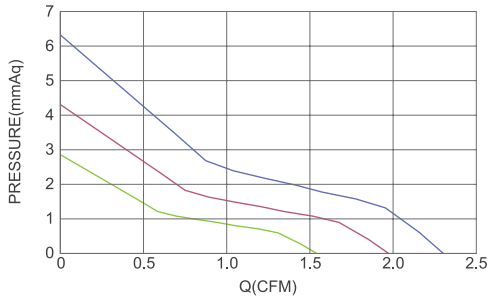

Model No.	Bearing Type	Voltage (VDC)	Current (A)	Power (W)	Speed (RPM)	Air Flow (CFM)	Air Flow (m^3/min)	Air Pressure (mmH_2O)	Air Pressure (Inch H_2O)	Noise (dBA)
TRS2510x05D	※★◎	5 (4.0~5.5)	0.05	0.25	6000	1.14	0.03	1.56	0.06	18.7
TRS2510x05L	※★◎	5 (4.0~5.5)	0.06	0.30	6800	1.29	0.04	2.00	0.08	19.2
TRS2510x05M	※★◎	5 (4.0~5.5)	0.07	0.35	8000	1.52	0.04	2.77	0.11	20.0
TRS2510x05H	※★◎	5 (4.0~5.5)	0.11	0.55	10000	1.91	0.05	4.33	0.17	21.7
TRS2510x05VH	※★◎	5 (4.0~5.5)	0.16	0.80	12000	2.27	0.06	6.24	0.25	24.3
TRS2510x12M	※★◎	12 (7.0~14.0)	0.05	0.60	8000	1.52	0.04	2.77	0.11	20.0
TRS2510x12H	※★◎	12 (7.0~14.0)	0.06	0.72	10000	1.91	0.05	4.33	0.17	21.7
TRS2510x12VH	※★◎	12 (7.0~14.0)	0.07	1.68	12000	2.27	0.06	6.24	0.25	24.3

x Bearing System ※：Sleeve ★：WRB ◎：Ball

★如果您需要的轉速或電壓或功能不在這份清單上，請與我們業務聯繫 Please contact us, if the SPEC you need is not in the list.

★產品詳細數據及功能請參閱承認書 Please see the approval sheet for more information . ★產品規格變更不另行通知 Specifications are subject to change without notice.

DC Axial Fan
TRS3007 SERIES 30X30X07mm

- Frame：Thermoplastic PBT UL94-V0
  外框材質：環保防火PBT
- Impeller：Thermoplastic PBT UL94-V0
  扇葉材質：環保防火PBT
- Bearing：※Sleeve・★WRB・◎Two Ball Bearing
  軸承：※含油・★WRB・◎滾珠軸承
- Unit Weight：6g
  風扇單體重量：6克

P&Q Curve | At Rated Voltage

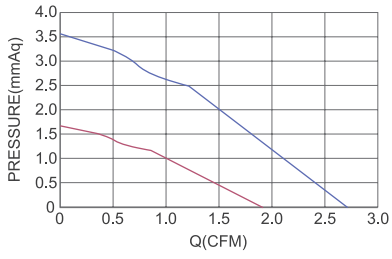

DIMENSIONS DRAWING | UNIT：mm

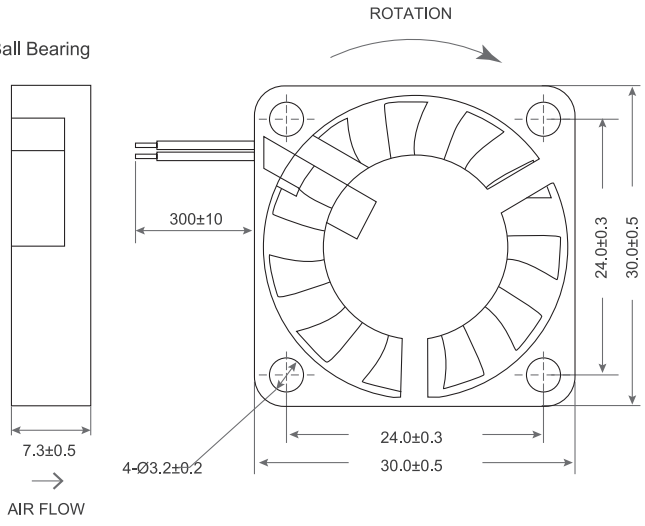

Model No.	Bearing Type	Voltage (VDC)	Current (A)	Power (W)	Speed (RPM)	Air Flow (CFM)	Air Flow (m^3/min)	Air Pressure (mmH₂O)	Air Pressure (Inch H₂O)	Noise (dBA)
TRS3007x05D	※★◎	5 (4.0~5.5)	0.05	0.25	5500	1.87	0.05	1.68	0.07	26.1
TRS3007x05L	※★◎	5 (4.0~5.5)	0.11	0.55	8000	2.72	0.08	3.56	0.14	30.2

DC Axial Fan
TRS3010 SERIES 30X30X10mm

- Frame：Thermoplastic PBT UL94-V0
  外框材質：環保防火PBT
- Impeller：Thermoplastic PBT UL94-V0
  扇葉材質：環保防火PBT
- Bearing：※Sleeve・◎Two Ball Bearing
  軸承：※含油・◎滾珠軸承
- Unit Weight：8g
  風扇單體重量：8克

P&Q Curve | At Rated Voltage

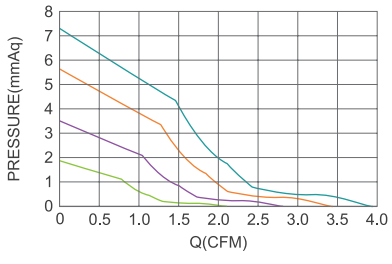

DIMENSIONS DRAWING | UNIT：mm

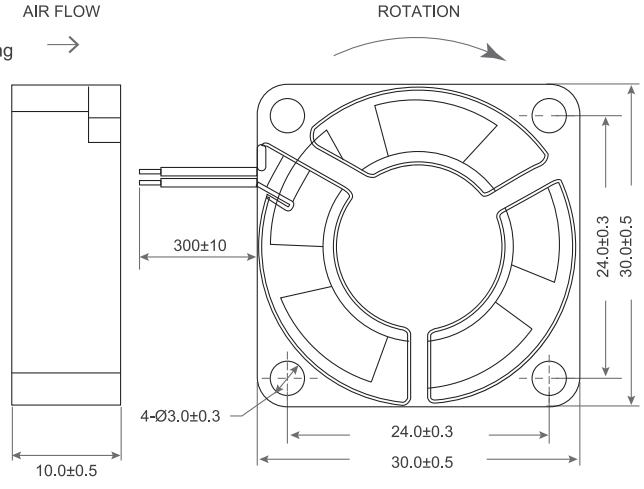

Model No.	Bearing Type	Voltage (VDC)	Current (A)	Power (W)	Speed (RPM)	Air Flow (CFM)	Air Flow (m^3/min)	Air Pressure (mmH₂O)	Air Pressure (Inch H₂O)	Noise (dBA)
TRS3010x05L	※★◎	5 (4.0~5.5)	0.07	0.35	6000	2.07	0.06	1.98	0.08	20.5
TRS3010x05M	※★◎	5 (4.0~5.5)	0.12	0.60	8000	2.76	0.08	3.51	0.14	25.2
TRS3010x05H	※◎	5 (4.0~5.5)	0.18	0.90	10000	3.45	0.10	5.49	0.22	31.6
TRS3010x12L	※★◎	12 (7.0~14.0)	0.05	0.60	6000	2.07	0.06	1.98	0.08	20.5
TRS3010x12M	※★◎	12 (7.0~14.0)	0.07	0.84	8000	2.76	0.08	3.51	0.14	25.2
TRS3010x12H	※◎	12 (7.0~14.0)	0.10	1.20	10000	3.45	0.10	5.49	0.22	31.6
TRS3010x12VH	※◎	12 (7.0~14.0)	0.13	1.56	11500	3.97	0.11	7.26	0.29	34.0

x Bearing System ※：Sleeve ★：WRB ◎：Ball

★如果您需要的轉速或電壓或功能不在這份清單上，請與我們業務聯繫 Please contact us, if the SPEC you need is not in the list.
★產品詳細數據及功能請參閱承認書 Please see the approval sheet for more information . ★產品規格變更不另行通知 Specifications are subject to change without notice.

DC Axial Fan

TRS3010 SERIES 30X30X10mm

DIMENSIONS DRAWING UNIT：mm

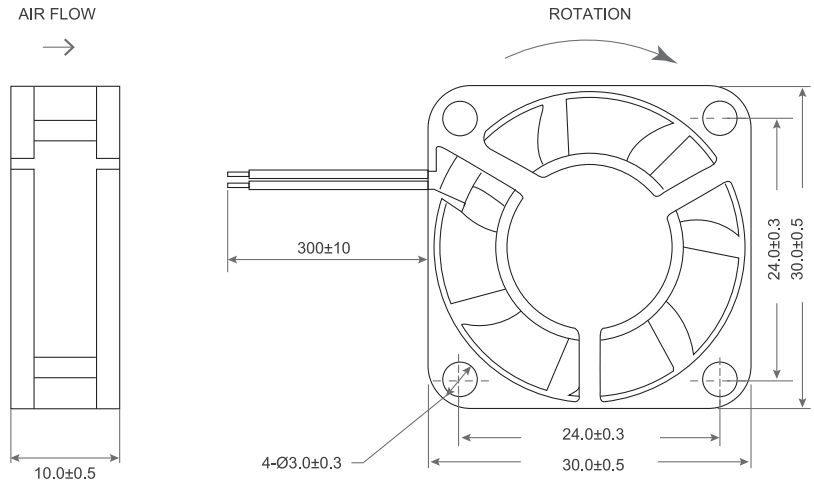

- Frame：Thermoplastic PBT UL94-V0
  外框材質：環保防火PBT
- Impeller：Thermoplastic PBT UL94-V0
  扇葉材質：環保防火PBT
- Bearing：※Sleeve・★WRB・◎Two Ball Bearing
  軸承：※含油・★WRB・◎滾珠軸承
- Unit Weight：8.5g
  風扇單體重量：8.5克

P&Q Curve At Rated Voltage

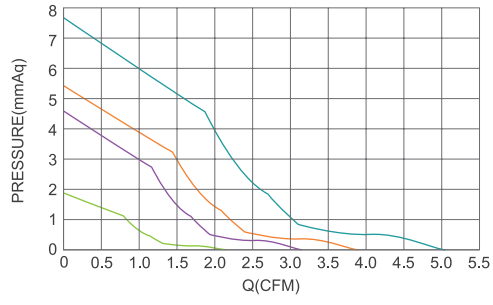

Model No.	Bearing Type	Voltage (VDC)	Current (A)	Power (W)	Speed (RPM)	Air Flow (CFM)	Air Flow (m^3/min)	Air Pressure (mmH_2O)	Air Pressure (Inch H_2O)	Noise (dBA)
TRS3010x05L	※★◎	5 (4.0~5.5)	0.07	0.35	6000	2.07	0.06	1.98	0.08	21.0
TRS3010x05M	※★◎	5 (4.0~5.5)	0.12	0.60	8000	2.76	0.08	3.51	0.14	25.2
TRS3010x05H	※★◎	5 (4.0~5.5)	0.19	0.96	11500	5.05	0.14	7.59	0.30	34.0
TRS3010x12L	※★◎	12 (7.0~14.0)	0.05	0.60	6000	2.07	0.06	1.98	0.08	21.0
TRS3010x12M	※★◎	12 (7.0~14.0)	0.06	0.72	8000	3.11	0.09	4.62	0.18	25.2
TRS3010x12H	※★◎	12 (7.0~14.0)	0.09	1.08	10000	3.73	0.11	5.33	0.21	31.6
TRS3010x12VH	※★◎	12 (7.0~14.0)	0.08	0.96	11500	5.05	0.14	7.59	0.30	34.0

(x) Bearing System ※：Sleeve ★：WRB ◎：Ball

★如果您需要的轉速或電壓或功能不在這份清單上，請與我們業務聯繫 Please contact us, if the SPEC you need is not in the list.

★產品詳細數據及功能請參閱承認書 Please see the approval sheet for more information . ★產品規格變更不另行通知 Specifications are subject to change without notice.

DC Axial Fan

TRS3010 U SERIES Ø30X10mm

DIMENSIONS DRAWING UNIT：mm

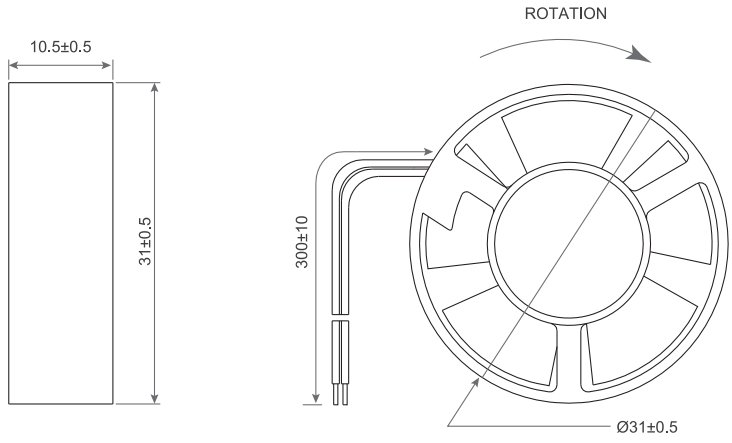

- Frame：Thermoplastic PBT UL94-V0
  外框材質：環保防火PBT
- Impeller：Thermoplastic PBT UL94-V0
  扇葉材質：環保防火PBT
- Bearing：※Sleeve・★WRB・◎Two Ball Bearing
  軸承：※含油・★WRB・◎滾珠軸承
- Unit Weight：8g
  風扇單體重量：8克

P&Q Curve At Rated Voltage

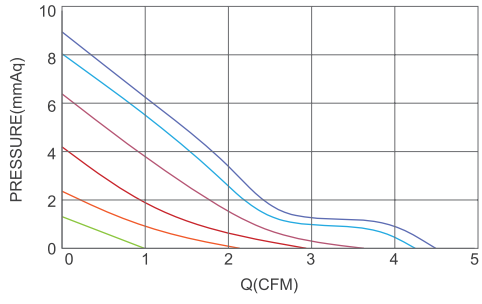

Model No.	Bearing Type	Voltage (VDC)	Current (A)	Power (W)	Speed (RPM)	Air Flow (CFM)	Air Flow (m^3/min)	Air Pressure (mmH2O)	Air Pressure (Inch H2O)	Noise (dBA)
TRS3010x05L	※◎★	5 (3.0~6.0)	0.14	0.72	5000	0.98	0.028	1.22	0.048	15.5
TRS3010x05M	※◎★	5 (3.0~6.0)	0.17	0.84	7000	2.25	0.064	2.50	0.098	22.4
TRS3010x05H	※◎★	5 (3.0~6.0)	0.19	0.96	9000	2.95	0.084	4.25	0.167	26.3
TRS3010x05VH	※◎★	5 (3.0~6.0)	0.22	1.08	11000	3.61	0.102	6.28	0.247	32.0
TRS3010x05SH	※◎★	5 (3.0~6.0)	0.24	1.20	13000	4.25	0.120	8.25	0.325	34.9
TRS3010x12L	※◎★	12 (8.5~13.5)	0.06	0.72	5000	0.98	0.028	1.22	0.048	15.5
TRS3010x12M	※◎★	12 (8.5~13.5)	0.07	0.84	7000	2.25	0.064	2.50	0.098	22.4
TRS3010x12H	※◎★	12 (8.5~13.5)	0.08	0.96	9000	2.95	0.084	4.25	0.167	26.3
TRS3010x12VH	※◎★	12 (8.5~13.5)	0.09	1.08	11000	3.61	0.102	6.28	0.247	32.0
TRS3010x12SH	※◎★	12 (8.5~13.5)	0.10	1.20	13000	4.25	0.120	8.25	0.325	34.9

(x) Bearing System ※：Sleeve ★：WRB ◎：Ball

★如果您需要的轉速或電壓或功能不在這份清單上，請與我們業務聯繫 Please contact us, if the SPEC you need is not in the list.

★產品詳細數據及功能請參閱承認書 Please see the approval sheet for more information . ★產品規格變更不另行通知 Specifications are subject to change without notice.

DC Axial Fan

TRS3015 N SERIES 30X30X15mm

DIMENSIONS DRAWING UNIT：mm

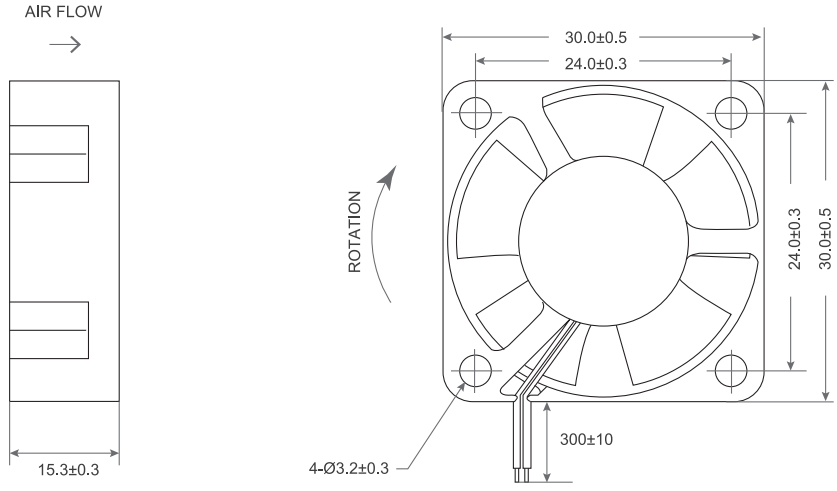

- Frame：Thermoplastic PBT UL94-V0
  外框材質：環保防火PBT
- Impeller：Thermoplastic PBT UL94-V0
  扇葉材質：環保防火PBT
- Bearing：※Sleeve・★WRB・◎Two Ball Bearing
  軸承：※含油・◎滾珠軸承
- Unit Weight：8.5g
  風扇單體重量：8.5克

P&Q Curve At Rated Voltage

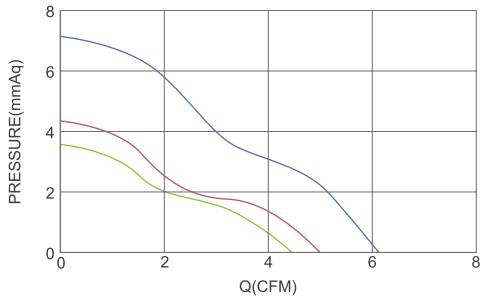

Model No.	Bearing Type	Voltage (VDC)	Current (A)	Power (W)	Speed (RPM)	Air Flow (CFM)	Air Flow (m^3/min)	Air Pressure (mmH_2O)	Air Pressure (Inch H_2O)	Noise (dBA)
TRS3015x05D	※◎	5 (4.5~5.5)	0.06	0.30	7000	3.80	0.11	2.79	0.11	17.0
TRS3015x05L	※◎	5 (4.5~5.5)	0.09	0.43	8000	4.40	0.12	3.81	0.15	20.5
TRS3015x05M	※◎	5 (4.5~5.5)	0.11	0.55	9000	4.90	0.14	4.32	0.17	25.0
TRS3015x05H	※◎	5 (4.5~5.5)	0.20	1.00	11000	5.70	0.16	6.35	0.25	30.0
TRS3015x12D	※◎	12 (9.0~13.2)	0.03	0.15	7000	3.80	0.11	2.79	0.11	17.0
TRS3015x12L	※◎	12 (7.0~13.2)	0.04	0.20	8000	4.40	0.12	3.81	0.15	20.5
TRS3015x12M	※◎	12 (7.0~13.2)	0.45	2.25	9000	4.90	0.14	4.32	0.17	25.0
TRS3015x12H	※◎	12 (7.0~13.2)	0.14	1.68	11500	6.10	0.17	7.11	0.28	30.0

x Bearing System ※：Sleeve ★：WRB ◎：Ball

★如果您需要的轉速或電壓或功能不在這份清單上，請與我們業務聯繫 Please contact us, if the SPEC you need is not in the list.

★產品詳細數據及功能請參閱承認書 Please see the approval sheet for more information . ★產品規格變更不另行通知 Specifications are subject to change without notice.

DC Axial Fan

TRS3510 SERIES 35X35X10mm

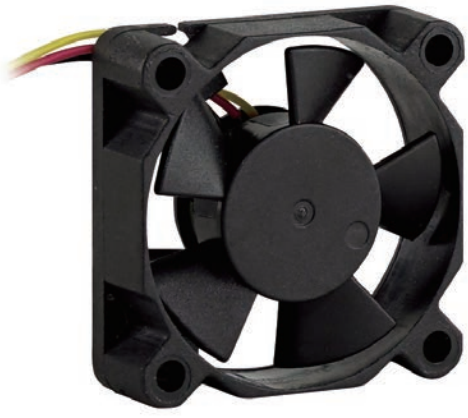

DIMENSIONS DRAWING UNIT：mm

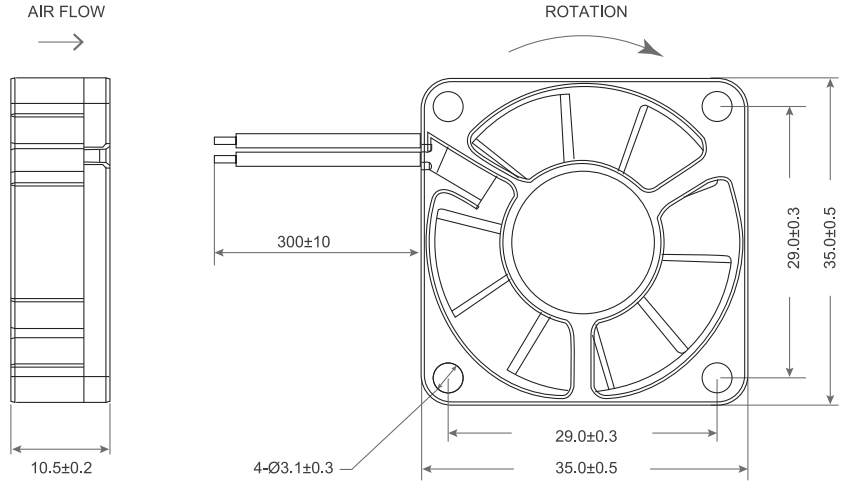

- Frame：Thermoplastic PBT UL94-V0
  外框材質：環保防火PBT
- Impeller：Thermoplastic PBT UL94-V0
  扇葉材質：環保防火PBT
- Bearing：※Sleeve・★WRB・◎Two Ball Bearing
  軸承：※含油・★WRB・◎滾珠軸承
- Unit Weight：10g
  風扇單體重量：10克

P&Q Curve At Rated Voltage

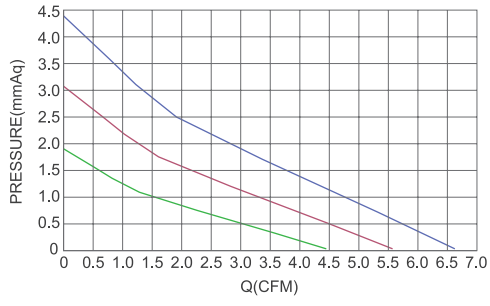

Model No.	Bearing Type	Voltage (VDC)	Current (A)	Power (W)	Speed (RPM)	Air Flow (CFM)	Air Flow (m^3/min)	Air Pressure (mmH_2O)	Air Pressure (Inch H_2O)	Noise (dBA)
TRS3510x05L	※★◎	5 (4.0~5.5)	0.10	0.50	6000	4.44	0.13	1.94	0.08	18.0
TRS3510x05M	※★◎	5 (4.0~5.5)	0.12	0.60	7500	5.55	0.16	3.04	0.12	21.0
TRS3510x05H	※★◎	5 (4.0~5.5)	0.15	0.75	9000	6.66	0.19	4.37	0.17	25.0
TRS3510x12L	※★◎	12 (7.0~14.0)	0.05	0.60	6000	4.44	0.13	1.94	0.08	18.0
TRS3510x12M	※★◎	12 (7.0~14.0)	0.06	0.72	7500	5.55	0.16	3.04	0.12	21.0
TRS3510x12H	※★◎	12 (7.0~14.0)	0.08	0.96	9000	6.66	0.19	4.37	0.17	25.0

(x) Bearing System ※：Sleeve ★：WRB ◎：Ball

★如果您需要的轉速或電壓或功能不在這份清單上，請與我們業務聯繫 Please contact us, if the SPEC you need is not in the list.

★產品詳細數據及功能請參閱承認書 Please see the approval sheet for more information . ★產品規格變更不另行通知 Specifications are subject to change without notice.

DC Axial Fan

TRS3510 U SERIES Ø35X10mm

DIMENSIONS DRAWING UNIT：mm

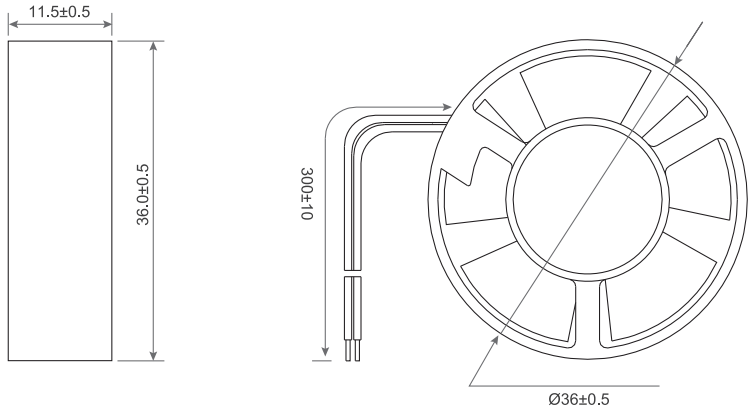

- Frame：Thermoplastic PBT UL94-V0
  外框材質：環保防火PBT
- Impeller：Thermoplastic PBT UL94-V0
  扇葉材質：環保防火PBT
- Bearing：※Sleeve・★WRB・◎Two Ball Bearing
  軸承：※含油・★WRB・◎滾珠軸承
- Unit Weight：9g
  風扇單體重量：9克

P&Q Curve At Rated Voltage

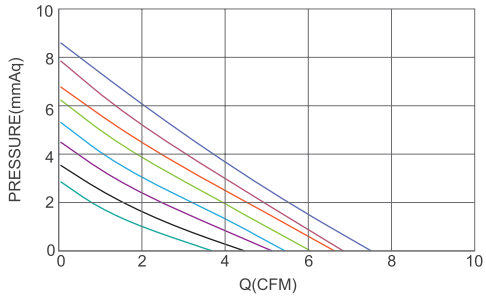

Model No.	Bearing Type	Voltage (VDC)	Current (A)	Power (W)	Speed (RPM)	Air Flow (CFM)	Air Flow (m^3/min)	Air Pressure (mmH_2O)	Air Pressure (Inch H_2O)	Noise (dBA)
TRS3510x05D	※◎★	5 (3.6~6.8)	0.10	0.5	7000	3.91	0.111	2.84	0.112	28.0
TRS3510x05L	※◎★	5 (3.6~6.8)	0.12	0.6	8000	4.50	0.128	3.51	0.138	31.0
TRS3510x05M	※◎★	5 (3.6~6.8)	0.13	0.7	9000	5.00	0.142	4.31	0.17	34.4
TRS3510x05H	※◎★	5 (3.6~6.8)	0.14	0.7	10000	5.32	0.151	5.12	0.202	37.1
TRS3510x05VH	※◎★	5 (3.6~6.8)	0.16	0.8	11000	6.06	0.171	6.11	0.241	39.4
TRS3510x05SH	※◎★	5 (3.6~6.8)	0.18	0.9	12000	6.39	0.182	6.77	0.267	41.0
TRS3510x05XH	※◎★	5 (3.6~6.8)	0.20	1.0	13000	6.87	0.195	7.97	0.314	42.6
TRS3510x05UH	※◎★	5 (3.6~6.8)	0.22	1.1	14000	7.41	0.211	8.74	0.344	44.7
TRS3510x12D	※◎★	12 (7.0~13.5)	0.04	0.5	7000	3.91	0.111	2.84	0.112	28.0
TRS3510x12L	※◎★	12 (7.0~13.5)	0.05	0.6	8000	4.50	0.128	3.51	0.138	31.0
TRS3510x12M	※◎★	12 (7.0~13.5)	0.05	0.7	9000	5.00	0.142	4.31	0.17	34.4
TRS3510x12H	※◎★	12 (7.0~13.5)	0.06	0.7	10000	5.32	0.151	5.12	0.202	37.1
TRS3510x12VH	※◎★	12 (7.0~13.5)	0.07	0.8	11000	6.06	0.171	6.11	0.241	39.4
TRS3510x12SH	※◎★	12 (7.0~13.5)	0.08	0.9	12000	6.39	0.182	6.77	0.267	41.0
TRS3510x12XH	※◎★	12 (7.0~13.5)	0.08	1.0	13000	6.87	0.195	7.97	0.314	42.6
TRS3510x12UH	※◎★	12 (7.0~13.5)	0.09	1.1	14000	7.41	0.211	8.74	0.344	44.7

x Bearing System ※：Sleeve ★：WRB ◎：Ball

★如果您需要的轉速或電壓或功能不在這份清單上，請與我們業務聯繫 Please contact us, if the SPEC you need is not in the list.

★產品詳細數據及功能請參閱承認書 Please see the approval sheet for more information . ★產品規格變更不另行通知 Specifications are subject to change without notice.

DC Axial Fan

TRD3828 U SERIES 38X38X28mm

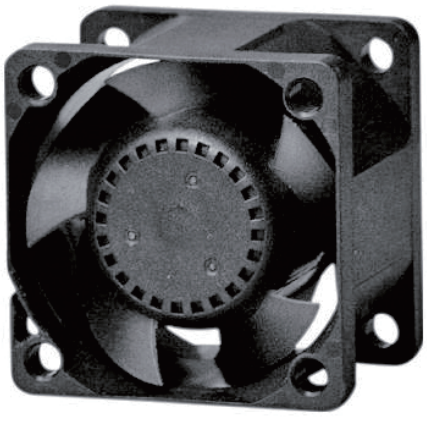

DIMENSIONS DRAWING UNIT：mm

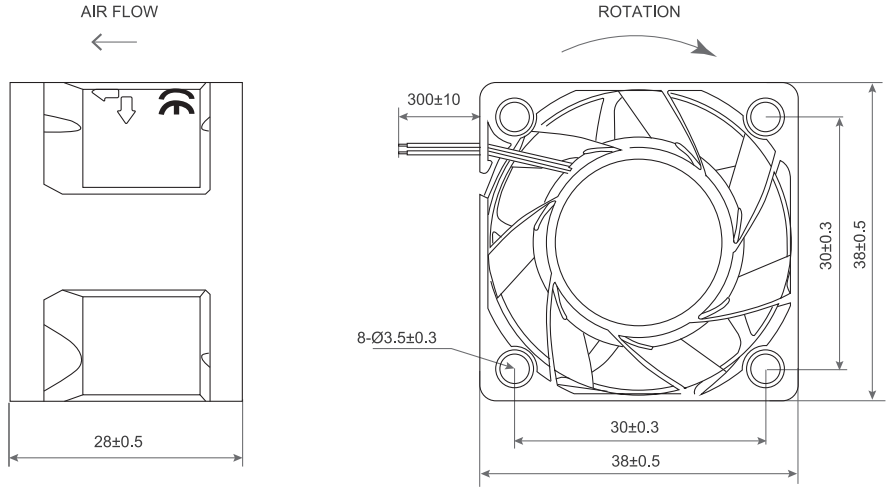

- ●Frame：Thermoplastic PBT UL94-V0
  外框材質：環保防火PBT
- ●Impeller：Thermoplastic PBT UL94-V0
  扇葉材質：環保防火PBT
- ●Bearing：◎Two Ball Bearing
  軸承：◎滾珠軸承
- ●Unit Weight：41g
  風扇單體重量：41克

P&Q Curve At Rated Voltage

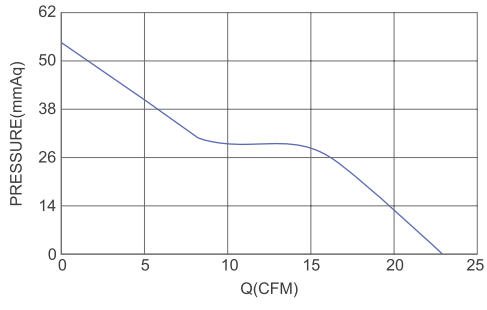

Model No.	Bearing Type	Voltage (VDC)	Current (A)	Power (W)	Speed (RPM)	Air Flow (CFM)	Air Flow (m^3/min)	Air Pressure (mmH2O)	Air Pressure (Inch H2O)	Noise (dBA)
TRD3828B12H	◎	12 (8.5~13.5)	0.52	6.24	20000	23.0	0.651	56.64	2.23	59.0

Ⓧ Bearing System ※：Sleeve ★：WRB ◎：Ball

★如果您需要的轉速或電壓或功能不在這份清單上，請與我們業務聯繫 Please contact us, if the SPEC you need is not in the list.

★產品詳細數據及功能請參閱承認書 Please see the approval sheet for more information . ★產品規格變更不另行通知 Specifications are subject to change without notice.

DC Axial Fan

TRS4007 U SERIES 40X40X7mm

DIMENSIONS DRAWING UNIT：mm

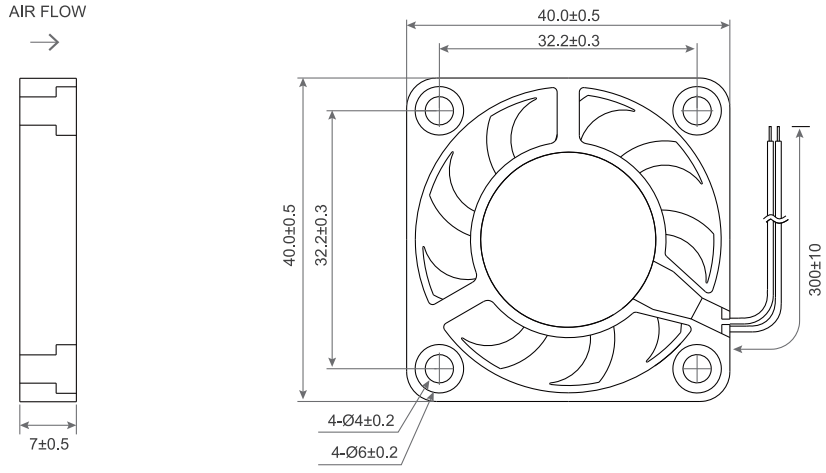

- Frame：Thermoplastic PBT UL94-V0
  外框材質：環保防火PBT
- Impeller：Thermoplastic PBT UL94-V0
  扇葉材質：環保防火PBT
- Bearing：※Sleeve・★WRB・◎Two Ball Bearing
  軸承：※含油・★WRB・◎滾珠軸承
- Unit Weight：14.5g
  風扇單體重量：14.5克

P&Q Curve At Rated Voltage

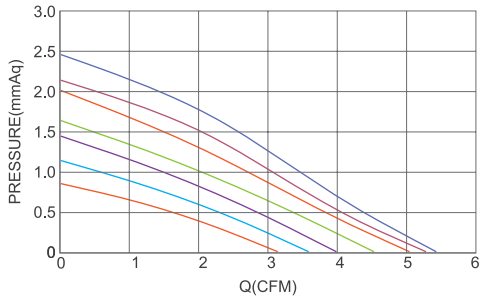

Model No.	Bearing Type	Voltage (VDC)	Current (A)	Power (W)	Speed (RPM)	Air Flow (CFM)	Air Flow (m^3/min)	Air Pressure (mmH_2O)	Air Pressure (Inch H_2O)	Noise (dBA)
TRS4007x05D	※◎★	5 (3.0~6.0)	0.12	0.60	4500	3.14	0.089	0.84	0.033	23.5
TRS4007x05L	※◎★	5 (3.0~6.0)	0.14	0.72	5000	3.70	0.104	1.20	0.050	24.5
TRS4007x05M	※◎★	5 (3.0~6.0)	0.17	0.84	5500	3.96	0.113	1.40	0.055	25.6
TRS4007x05H	※◎★	5 (3.0~6.0)	0.19	0.96	6000	4.60	0.131	1.65	0.065	27.5
TRS4007x05HH	※◎★	5 (3.0~6.0)	0.20	1.02	6500	5.06	0.144	2.02	0.079	29.3
TRS4007x05VH	※◎★	5 (3.0~6.0)	0.21	1.08	7000	5.31	0.151	2.17	0.085	30.4
TRS4007x05SH	※◎★	5 (3.0~6.0)	0.24	1.20	7500	5.37	0.153	2.40	0.094	31.5
TRS4007x12D	※◎★	12 (8.5~13.5)	0.05	0.60	4500	3.14	0.089	0.84	0.033	23.5
TRS4007x12L	※◎★	12 (8.5~13.5)	0.06	0.72	5000	3.70	0.104	1.20	0.050	24.5
TRS4007x12M	※◎★	12 (8.5~13.5)	0.07	0.84	5500	3.96	0.113	1.40	0.055	25.6
TRS4007x12H	※◎★	12 (8.5~13.5)	0.08	0.96	6000	4.60	0.131	1.65	0.065	27.5
TRS4007x12HH	※◎★	12 (8.5~13.5)	0.09	1.02	6500	5.06	0.144	2.02	0.079	29.3
TRS4007x12VH	※◎★	12 (8.5~13.5)	0.90	1.08	7000	5.31	0.151	2.17	0.085	30.4
TRS4007x12SH	※◎★	12 (8.5~13.5)	1.00	1.20	7500	5.37	0.153	2.40	0.094	31.5

Screw Holes：

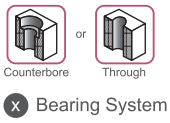

X Bearing System ※：Sleeve ★：WRB ◎：Ball

★如果您需要的轉速或電壓或功能不在這份清單上，請與我們業務聯繫 Please contact us, if the SPEC you need is not in the list.

★產品詳細數據及功能請參閱承認書 Please see the approval sheet for more information . ★產品規格變更不另行通知 Specifications are subject to change without notice.

DC Axial Fan

TRS4010 SERIES 40X40X10mm

DIMENSIONS DRAWING UNIT：mm

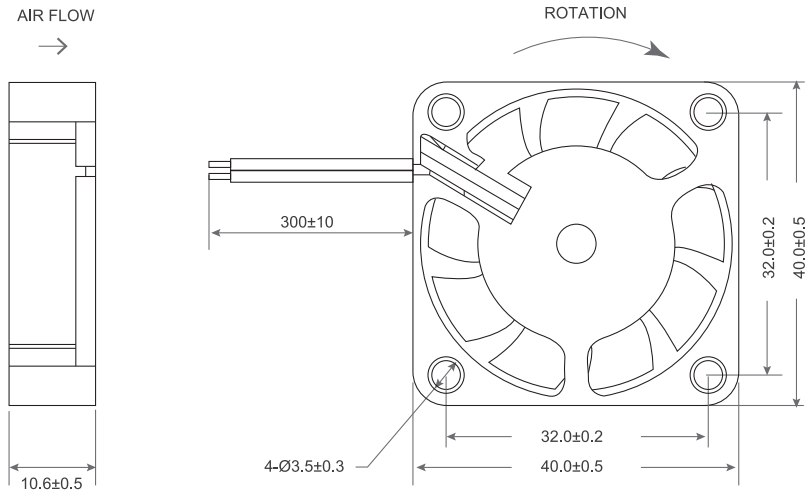

P&Q Curve At Rated Voltage

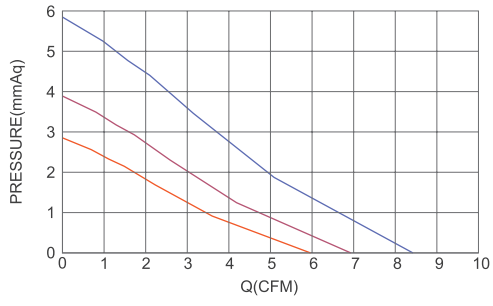

- Frame：Thermoplastic PBT UL94-V0
  外框材質：環保防火PBT
- Impeller：Thermoplastic PBT UL94-V0
  扇葉材質：環保防火PBT
- Bearing：※Sleeve・★WRB・◎Two Ball Bearing
  軸承：※含油・★WRB・◎滾珠軸承
- Unit Weight：12g
  風扇單體重量：12克
- Screw hole diameter 螺絲孔徑：Ø3.5 or Ø4.3

Model No.	Bearing Type	Voltage (VDC)	Current (A)	Power (W)	Speed (RPM)	Air Flow (CFM)	Air Flow (m^3/min)	Air Pressure (mmH₂O)	Air Pressure (Inch H₂O)	Noise (dBA)
TRS4010x05L	※★◎	5 (4.0~5.5)	0.09	0.45	4200	4.14	0.12	1.40	0.06	24.0
TRS4010x05M	※★◎	5 (4.0~5.5)	0.14	0.70	5000	4.93	0.14	1.99	0.08	26.0
TRS4010x05H	※★◎	5 (4.0~5.5)	0.19	0.95	6000	5.92	0.17	2.87	0.11	29.5
TRS4010x05VH	※★◎	5 (4.0~5.5)	0.24	1.20	7000	6.91	0.20	3.90	0.15	32.8
TRS4010x12L	※★◎	12 (7.0~14.0)	0.04	0.48	4200	4.14	0.12	1.40	0.06	24.0
TRS4010x12M	※★◎	12 (7.0~14.0)	0.06	0.72	5000	4.93	0.14	1.99	0.08	26.0
TRS4010x12H	※★◎	12 (7.0~14.0)	0.08	0.96	6000	5.92	0.17	2.87	0.11	29.5
TRS4010x12VH	※★◎	12 (7.0~14.0)	0.10	1.20	7000	6.91	0.20	3.90	0.15	32.8
TRS4010x24M	※★◎	24 (15.0~27.0)	0.03	0.72	5000	4.93	0.14	1.99	0.08	26.0
TRS4010x24H	※★◎	24 (15.0~27.0)	0.04	0.96	6000	5.92	0.17	2.87	0.11	29.5
TRS4010x24VH	※★◎	24 (15.0~27.0)	0.05	1.20	7000	6.91	0.20	3.90	0.15	32.8
TRS4010x24SH	※★◎	24 (15.0~27.0)	0.04	1.44	8500	8.39	0.24	5.75	0.23	36.4

Screw Holes：

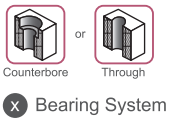

X Bearing System ※：Sleeve ★：WRB ◎：Ball

★如果您需要的轉速或電壓或功能不在這份清單上，請與我們業務聯繫 Please contact us, if the SPEC you need is not in the list.
★產品詳細數據及功能請參閱承認書 Please see the approval sheet for more information . ★產品規格變更不另行通知 Specifications are subject to change without notice.

DC Axial Fan

TRS4010 B SERIES 40X40X10mm

DIMENSIONS DRAWING UNIT：mm

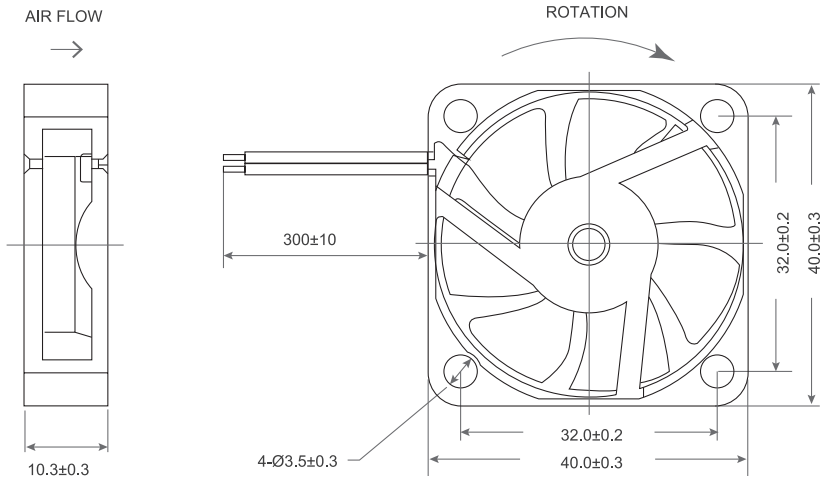

P&Q Curve At Rated Voltage

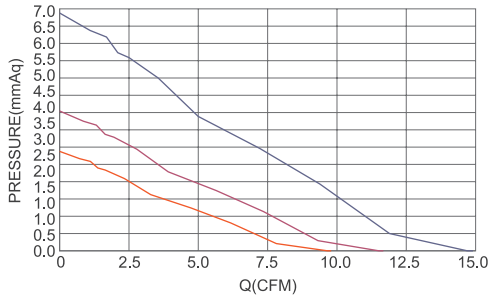

- ●Frame：Thermoplastic PBT UL94-V0
  外框材質：環保防火PBT
- ●Impeller：Thermoplastic PBT UL94-V0
  扇葉材質：環保防火PBT
- ●Bearing：※Sleeve・★WRB・◎Two Ball Bearing
  軸承：※含油・★WRB・◎滾珠軸承
- ●Unit Weight：16g
  風扇單體重量：16克
- ●Screw hole diameter 螺絲孔徑：Ø3.5 or Ø4.3

Model No.	Bearing Type	Voltage (VDC)	Current (A)	Power (W)	Speed (RPM)	Air Flow (CFM)	Air Flow (m^3/min)	Air Pressure (mmH_2O)	Air Pressure (Inch H_2O)	Noise (dBA)
TRS4010x05L	※★◎	5 (3.5~6.0)	0.07	0.36	4500	7.85	0.22	1.92	0.08	21.5
TRS4010x05M	※★◎	5 (3.5~6.0)	0.12	0.60	5500	9.59	0.24	2.87	0.11	24.2
TRS4010x05H	※★◎	5 (3.5~6.0)	0.17	0.84	6500	11.33	0.32	4.00	0.16	28.9
TRS4010x05VH	※★◎	5 (3.5~6.0)	0.25	1.23	7500	13.08	0.37	5.33	0.21	30.7
TRS4010x12L	※★◎	12 (7.0~14.0)	0.03	0.36	4500	7.85	0.22	1.92	0.08	21.5
TRS4010x12M	※★◎	12 (7.0~14.0)	0.05	0.60	5500	9.59	0.24	2.87	0.11	24.2
TRS4010x12H	※★◎	12 (7.0~14.0)	0.07	0.84	6500	11.33	0.32	4.00	0.16	28.9
TRS4010x12VH	※★◎	12 (7.0~14.0)	0.10	1.23	7500	13.08	0.37	5.33	0.21	30.7
TRS4010x12SH	※★◎	12 (7.0~14.0)	0.14	1.70	8500	14.82	0.42	6.85	0.27	32.7
TRS4010x24L	※★◎	24 (15.0~27.0)	0.02	0.36	4500	7.85	0.22	1.92	0.08	21.5
TRS4010x24M	※★◎	24 (15.0~27.0)	0.03	0.60	5500	9.59	0.24	2.87	0.11	24.2
TRS4010x24H	※★◎	24 (15.0~27.0)	0.04	0.84	6500	11.33	0.32	4.00	0.16	28.9
TRS4010x24VH	※★◎	24 (15.0~27.0)	0.05	1.23	7500	13.08	0.37	5.33	0.21	30.7
TRS4010x24SH	※★◎	24 (15.0~27.0)	0.07	1.70	8500	14.82	0.42	6.85	0.27	32.7

(x) Bearing System ※：Sleeve ★：WRB ◎：Ball

★如果您需要的轉速或電壓或功能不在這份清單上，請與我們業務聯繫 Please contact us, if the SPEC you need is not in the list.

★產品詳細數據及功能請參閱承認書 Please see the approval sheet for more information . ★產品規格變更不另行通知 Specifications are subject to change without notice.

DC Axial Fan

TRS4010 H SERIES 40X40X10mm

DIMENSIONS DRAWING UNIT：mm

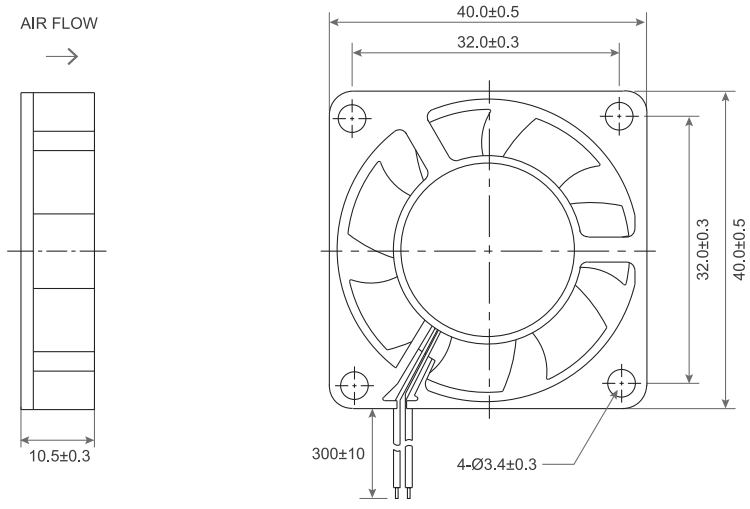

P&Q Curve At Rated Voltage

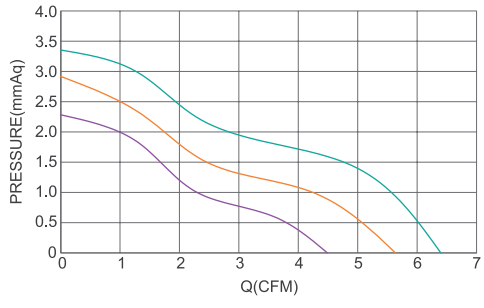

- Frame：Thermoplastic PBT UL94-V0
  外框材質：環保防火PBT
- Impeller：Thermoplastic PBT UL94-V0
  扇葉材質：環保防火PBT
- Bearing：※Sleeve・★WRB・◎Two Ball Bearing
  軸承：※含油・★WRB・◎滾珠軸承
- Unit Weight：17g
  風扇單體重量：17克
- Screw hole diameter 螺絲孔徑：Ø3.5 or Ø4.3

Model No.	Bearing Type	Voltage (VDC)	Current (A)	Power (W)	Speed (RPM)	Air Flow (CFM)	Air Flow (m^3/min)	Air Pressure (mmH₂O)	Air Pressure (Inch H₂O)	Noise (dBA)
TRS4010x05L	※★◎	5 (4.5~5.5)	0.12	0.60	4200	4.48	0.13	2.32	0.091	21.13
TRS4010x05M	※★◎	5 (4.5~5.5)	0.18	0.90	5400	5.62	0.16	2.91	0.115	24.87
TRS4010x05H	※★◎	5 (4.5~5.5)	0.24	1.20	6000	6.40	0.18	3.31	0.130	26.26
TRS4010x12L	※★◎	12 (10.8~13.2)	0.06	0.72	4200	4.48	0.13	2.32	0.091	21.13
TRS4010x12M	※★◎	12 (10.8~13.2)	0.08	0.96	5400	5.62	0.16	2.91	0.115	24.87
TRS4010x12H	※★◎	12 (10.8~13.2)	0.10	1.20	6000	6.40	0.18	3.31	0.130	26.26
TRS4010x24L	※★◎	24 (21.6~26.4)	0.03	0.72	4200	4.48	0.13	2.32	0.091	21.13
TRS4010x24M	※★◎	24 (21.6~26.4)	0.04	0.96	6000	5.62	0.16	2.91	0.115	24.87
TRS4010x24H	※★◎	24 (21.6~26.4)	0.06	1.44	6500	6.40	0.18	3.31	0.130	26.26

Screw Holes：

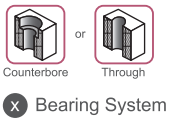

X Bearing System ※：Sleeve ★：WRB ◎：Ball

★如果您需要的轉速或電壓或功能不在這份清單上，請與我們業務聯繫 Please contact us, if the SPEC you need is not in the list.
★產品詳細數據及功能請參閱承認書 Please see the approval sheet for more information . ★產品規格變更不另行通知 Specifications are subject to change without notice.

DC Axial Fan

TRS4010 E SERIES 40X40X10mm

DIMENSIONS DRAWING UNIT：mm

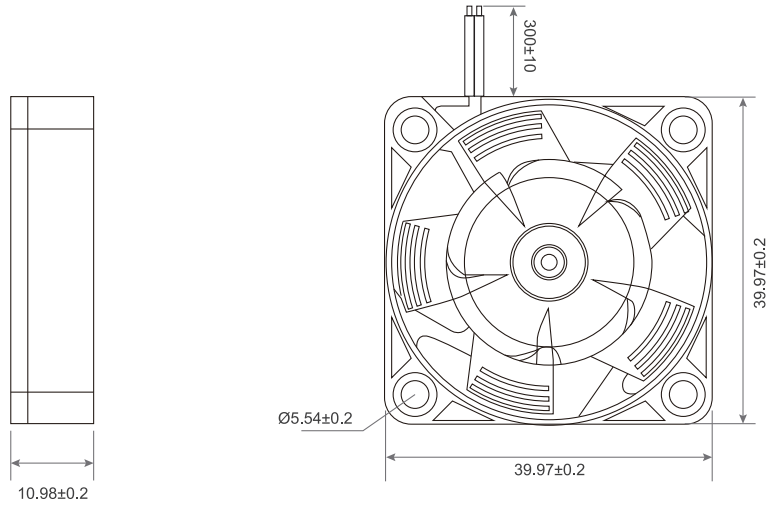

P&Q Curve At Rated Voltage

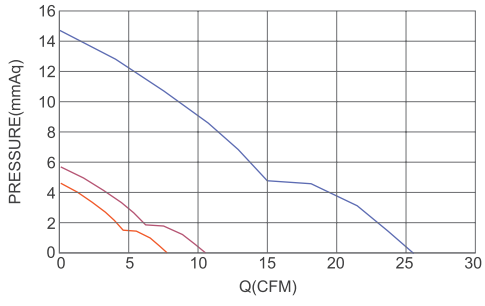

- Frame：Thermoplastic PBT UL94-V0
  外框材質：環保防火PBT
- Impeller：Thermoplastic PBT UL94-V0
  扇葉材質：環保防火PBT
- Bearing：※Sleeve・★WRB・◎Two Ball Bearing
  軸承：※含油・★WRB・◎滾珠軸承
- Unit Weight：15.0g
  風扇單體重量：15.0克

Model No.	Bearing Type	Voltage (VDC)	Current (A)	Power (W)	Speed (RPM)	Air Flow (CFM)	Air Flow (m^3/min)	Air Pressure (mmH2O)	Air Pressure (Inch H2O)	Noise (dBA)
TRS4010x05D	※★◎	5 (3.5~6.8)	0.06	0.30	3500	3.20	0.09	2.17	0.09	15.6
TRS4010x05L	※★◎	5 (3.5~6.8)	0.09	0.45	5500	5.07	0.14	3.42	0.14	24.5
TRS4010x05M	※★◎	5 (3.5~6.8)	0.12	0.60	6500	7.24	0.20	4.70	0.18	28.6
TRS4010x05H	※★◎	5 (3.5~6.8)	0.15	0.75	7500	10.22	0.29	5.76	0.23	30.5
TRS4010x05VH	※★◎	5 (5.0~8.4)	0.20	1.00	18000	25.40	0.72	14.60	0.59	45.0
TRS4010x12L	※★◎	12 (6.0~13.5)	0.04	0.48	3500	3.20	0.09	2.17	0.09	15.6
TRS4010x12M	※★◎	12 (6.0~13.5)	0.10	1.20	6000	5.10	0.15	3.50	0.15	25.0
TRS4010x12H	※★◎	12 (6.0~13.5)	0.12	1.44	7500	10.22	0.29	5.76	0.23	30.5
TRS4010x12VH	※★◎	12 (6.0~13.5)	0.15	1.80	8000	11.29	0.32	6.49	0.26	33.4
TRS4010x24M	※★◎	24 (18.0~26.5)	0.03	0.72	3500	3.20	0.09	2.17	0.09	15.6
TRS4010x24H	※★◎	24 (18.0~26.5)	0.06	1.44	7500	10.22	0.29	5.76	0.23	30.5
TRS4010x24VH	※★◎	24 (18.0~26.5)	0.08	1.92	8000	11.29	0.32	6.49	0.26	33.4

x Bearing System ※：Sleeve ★：WRB ◎：Ball

★如果您需要的轉速或電壓或功能不在這份清單上，請與我們業務聯繫 Please contact us, if the SPEC you need is not in the list.

★產品詳細數據及功能請參閱承認書 Please see the approval sheet for more information . ★產品規格變更不另行通知 Specifications are subject to change without notice.

DC Axial Fan

SRL4010 SERIES 40X40X10mm

DIMENSIONS DRAWING UNIT：mm

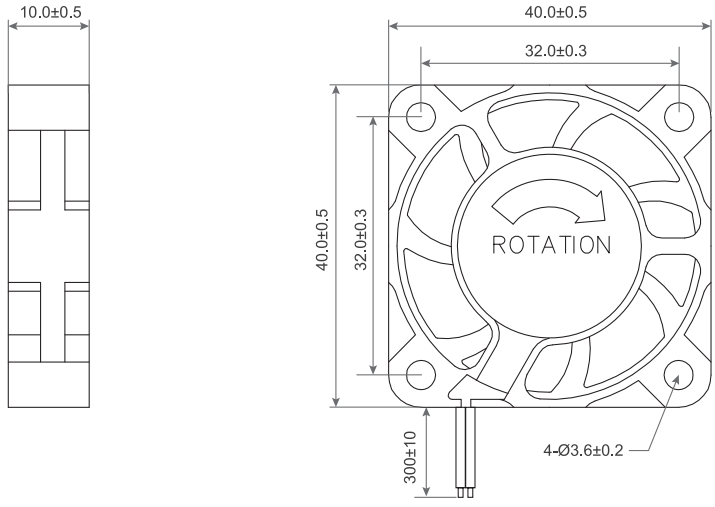

- Frame：Thermoplastic PBT UL94-V0
  外框材質：環保防火PBT
- Impeller：Thermoplastic PBT UL94-V0
  扇葉材質：環保防火PBT
- Bearing：※Sleeve・★WRB・◎Two Ball Bearing
  軸承：※含油・★WRB・◎滾珠軸承
- Unit Weight：15.6g
  風扇單體重量：15.6克
- Screw hole diameter 螺絲孔徑：Ø3.5 or Ø4.3

P&Q Curve At Rated Voltage

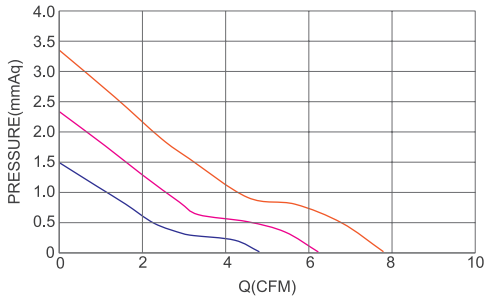

Model No.	Bearing Type	Voltage (VDC)	Current (A)	Power (W)	Speed (RPM)	Air Flow (CFM)	Air Flow (m^3/min)	Air Pressure (mmH₂O)	Air Pressure (Inch H₂O)	Noise (dBA)
SRLx0401012LB	※★◎	12 (6.0~13.8)	0.10	1.20	4000	4.81	0.14	1.49	0.06	12.3
SRLx0401012MB	※★◎	12 (6.0~13.8)	0.15	1.80	5000	6.22	0.18	2.33	0.09	20.2
SRLx0401012HB	※★◎	12 (6.0~13.8)	0.20	2.40	6000	7.79	0.22	3.35	0.13	24.1

(x) Bearing System ※：Sleeve ★：WRB ◎：Ball

★如果您需要的轉速或電壓或功能不在這份清單上，請與我們業務聯繫 Please contact us, if the SPEC you need is not in the list.

★產品詳細數據及功能請參閱承認書 Please see the approval sheet for more information . ★產品規格變更不另行通知 Specifications are subject to change without notice.

DC Axial Fan

TRS4015 SERIES 40X40X15mm

DIMENSIONS DRAWING UNIT：mm

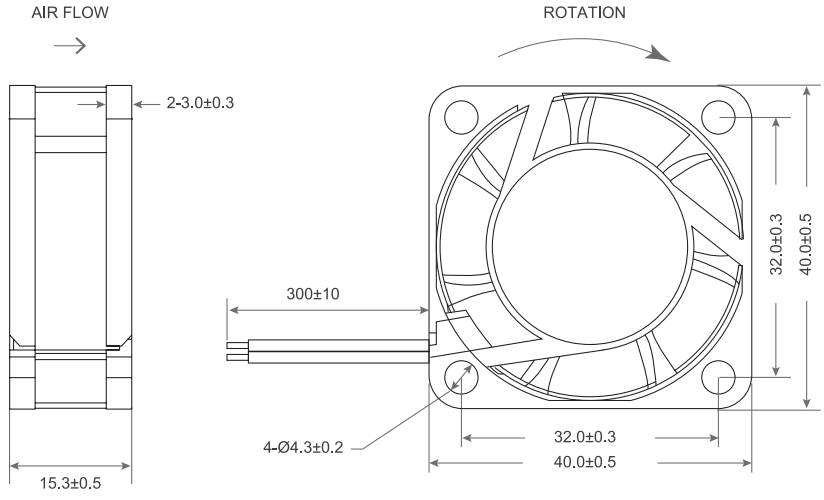

P&Q Curve At Rated Voltage

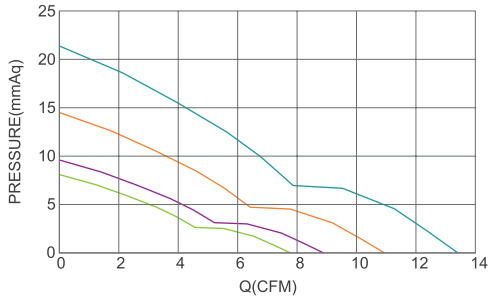

- Frame：Thermoplastic PBT UL94-V0
  外框材質：環保防火PBT
- Impeller：Thermoplastic PBT UL94-V0
  扇葉材質：環保防火PBT
- Bearing：※Sleeve・★WRB・◎Two Ball Bearing
  軸承：※含油・★WRB・◎滾珠軸承
- Unit Weight：17g
  風扇單體重量：17克
- Screw hole diameter 螺絲孔徑：Ø3.5 or Ø4.3

Model No.	Bearing Type	Voltage (VDC)	Current (A)	Power (W)	Speed (RPM)	Air Flow (CFM)	Air Flow (m^3/min)	Air Pressure (mmH_2O)	Air Pressure (Inch H_2O)	Noise (dBA)
TRS4015x05D	※★◎	5 (4.0~6.0)	0.14	0.72	5000	4.95	0.14	3.07	0.12	18.6
TRS4015x05L	※★◎	5 (4.0~6.0)	0.19	0.96	6000	5.94	0.17	4.46	0.18	23.3
TRS4015x05M	※★◎	5 (4.0~6.0)	0.24	1.20	7000	6.84	0.19	5.86	0.23	27.3
TRS4015x05H	※★◎	5 (4.0~6.0)	0.32	1.60	8000	7.82	0.22	7.65	0.30	30.8
TRS4015x12L	※★◎	12 (7.0~14.0)	0.06	0.72	6000	5.94	0.17	4.46	0.18	23.3
TRS4015x12M	※★◎	12 (7.0~14.0)	0.08	0.96	7000	6.84	0.19	5.86	0.23	27.3
TRS4015x12H	※★◎	12 (7.0~14.0)	0.10	1.20	8000	7.82	0.22	7.65	0.30	30.8
TRS4015x12VH	※★◎	12 (7.0~14.0)	0.08	0.96	9000	8.80	0.25	9.69	0.38	33.9
TRS4015x12SH	※★◎	12 (7.0~14.0)	0.12	1.44	11000	10.75	0.30	14.47	0.57	40.1
TRS4015x12UH	※★◎	12 (7.0~14.0)	0.20	2.40	13500	13.20	0.37	21.80	0.86	45.3
TRS4015x24M	※★◎	24 (15.0~27.0)	0.12	1.44	7000	6.84	0.19	5.86	0.23	27.3
TRS4015x24H	※★◎	24 (15.0~27.0)	0.04	0.96	8000	7.82	0.22	7.65	0.30	30.8
TRS4015x24VH	※★◎	24 (15.0~27.0)	0.05	1.20	9000	8.80	0.25	9.69	0.38	33.9
TRS4015x24SH	※★◎	24 (15.0~27.0)	0.06	1.44	11000	10.75	0.30	14.47	0.57	40.1
TRS4015x24UH	※★◎	24 (15.0~27.0)	0.10	2.40	13500	13.20	0.37	21.80	0.86	45.3

(x) Bearing System ※：Sleeve ★：WRB ◎：Ball

★如果您需要的轉速或電壓或功能不在這份清單上，請與我們業務聯繫 Please contact us, if the SPEC you need is not in the list.

★產品詳細數據及功能請參閱承認書 Please see the approval sheet for more information . ★產品規格變更不另行通知 Specifications are subject to change without notice.

DC Axial Fan

TRS4020 SERIES 40X40X20mm

DIMENSIONS DRAWING UNIT：mm

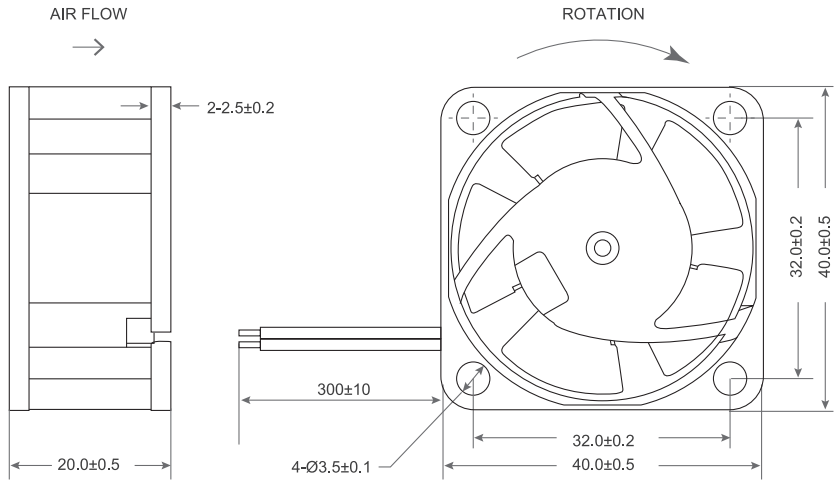

- Frame：Thermoplastic PBT UL94-V0
  外框材質：環保防火PBT
- Impeller：Thermoplastic PBT UL94-V0
  扇葉材質：環保防火PBT
- Bearing：※Sleeve・★WRB・◎Two Ball Bearing
  軸承：※含油・★WRB・◎滾珠軸承
- Unit Weight：24g
  風扇單體重量：24克
- Screw hole diameter 螺絲孔徑：Ø3.5 or Ø4.3

P&Q Curve At Rated Voltage

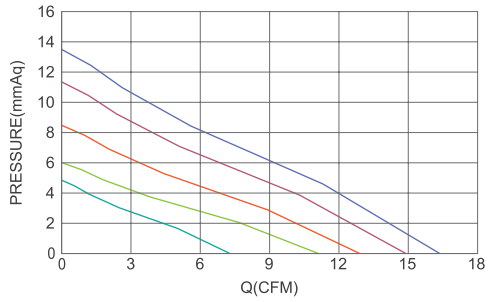

Model No.	Bearing Type	Voltage (VDC)	Current (A)	Power (W)	Speed (RPM)	Air Flow (CFM)	Air Flow (m^3/min)	Air Pressure (mmH₂O)	Air Pressure (Inch H₂O)	Noise (dBA)
TRS4020x05D	※★◎	5 (4.0~6.0)	0.12	0.60	5000	5.19	0.15	2.83	0.11	23.5
TRS4020x05L	※★◎	5 (4.0~6.0)	0.14	0.72	6500	6.75	0.19	4.79	0.19	27.2
TRS4020x05M	※★◎	5 (4.0~6.0)	0.19	0.96	8000	10.89	0.31	5.99	0.24	29.8
TRS4020x12D	※★◎	12 (7.0~14.0)	0.05	0.60	5000	5.19	0.15	2.83	0.11	23.5
TRS4020x12L	※★◎	12 (7.0~14.0)	0.06	0.72	6500	6.75	0.19	4.79	0.19	27.2
TRS4020x12M	※★◎	12 (7.0~14.0)	0.08	0.96	8000	10.89	0.31	5.99	0.24	29.8
TRS4020x12H	※★◎	12 (7.0~14.0)	0.10	1.20	9500	12.93	0.37	8.45	0.33	32.8
TRS4020x12VH	※★◎	12 (7.0~14.0)	0.16	1.92	11000	14.97	0.42	11.33	0.45	36.1
TRS4020x12SH	※★◎	12 (7.0~14.0)	0.20	2.40	12000	16.33	0.46	13.48	0.53	39.5
TRS4020x24M	※★◎	24 (15.0~27.0)	0.04	0.96	8000	10.89	0.31	5.99	0.24	29.8
TRS4020x24H	※★◎	24 (15.0~27.0)	0.05	1.20	9500	12.93	0.37	8.45	0.33	32.8
TRS4020x24VH	※★◎	24 (15.0~27.0)	0.08	1.92	11000	14.97	0.42	11.33	0.45	36.1
TRS4020x24SH	※★◎	24 (15.0~27.0)	0.10	2.40	12000	16.33	0.46	13.48	0.53	39.5

Screw Holes：

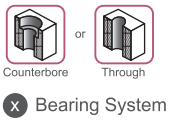

X Bearing System ※：Sleeve ★：WRB ◎：Ball

★如果您需要的轉速或電壓或功能不在這份清單上，請與我們業務聯繫 Please contact us, if the SPEC you need is not in the list.

★產品詳細數據及功能請參閱承認書 Please see the approval sheet for more information . ★產品規格變更不另行通知 Specifications are subject to change without notice.

DC Axial Fan

TRS4020 B SERIES 40X40X20mm

DIMENSIONS DRAWING UNIT：mm

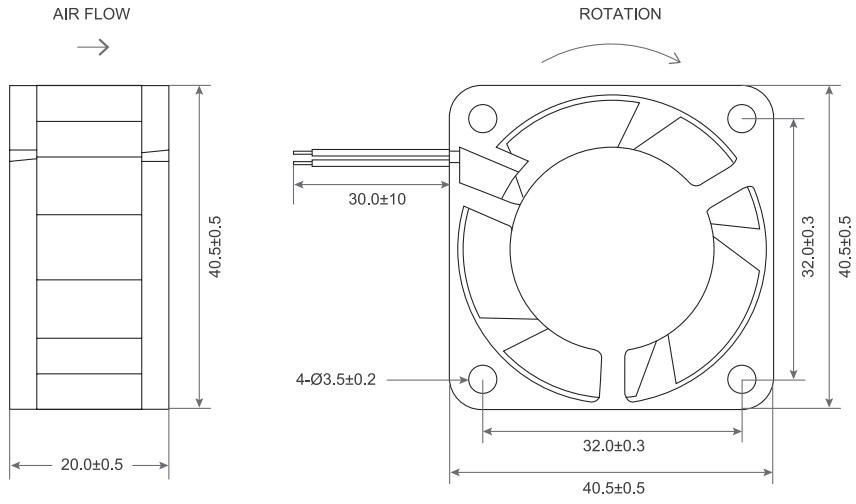

P&Q Curve At Rated Voltage

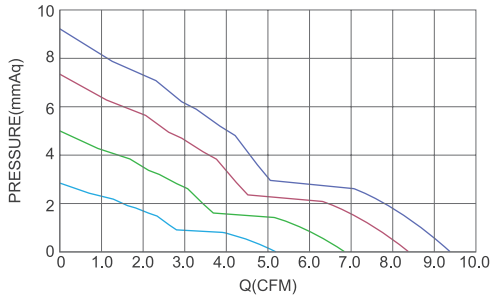

- Frame：Thermoplastic PBT UL94-V0
  外框材質：環保防火PBT
- Impeller：Thermoplastic PBT UL94-V0
  扇葉材質：環保防火PBT
- Bearing：※Sleeve・★WRB・◎Two Ball Bearing
  軸承：※含油・★WRB・◎滾珠軸承
- Unit Weight：24g
  風扇單體重量：24克
- Screw hole diameter 螺絲孔徑：Ø3.5 or Ø4.3

Model No.	Bearing Type	Voltage (VDC)	Current (A)	Power (W)	Speed (RPM)	Air Flow (CFM)	Air Flow (m^3/min)	Air Pressure (mmH_2O)	Air Pressure (Inch H_2O)	Noise (dBA)
TRS4020x12D	※◎★	12 (7.0~14.0)	0.05	0.60	5000	5.19	0.15	2.83	0.11	29.6
TRS4020x12L	※◎★	12 (7.0~14.0)	0.06	0.72	6500	6.75	0.19	4.79	0.19	27.2
TRS4020x12M	※◎★	12 (7.0~14.0)	0.08	0.96	8000	8.31	0.23	7.25	0.29	36.1
TRS4020x12H	※◎★	12 (7.0~14.0)	0.12	1.44	9000	9.34	0.26	9.18	0.36	38.2

Screw Holes：

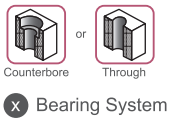

X Bearing System ※：Sleeve ★：WRB ◎：Ball

★如果您需要的轉速或電壓或功能不在這份清單上，請與我們業務聯繫 Please contact us, if the SPEC you need is not in the list.

★產品詳細數據及功能請參閱承認書 Please see the approval sheet for more information . ★產品規格變更不另行通知 Specifications are subject to change without notice.

DC Axial Fan

TRD4020 U SERIES 40X40X20mm

DIMENSIONS DRAWING UNIT：mm

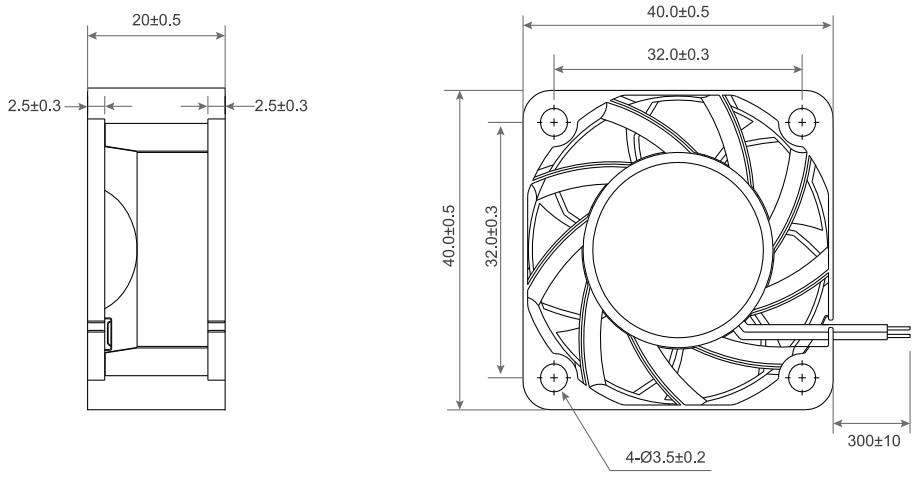

- Frame：Thermoplastic PBT UL94-V0
  外框材質：環保防火PBT
- Impeller：Thermoplastic PBT UL94-V0
  扇葉材質：環保防火PBT
- Bearing：※Sleeve・★WRB・◎Two Ball Bearing
  軸承：※含油・★WRB・◎滾珠軸承
- Unit Weight：26g
  風扇單體重量：26克

P&Q Curve At Rated Voltage

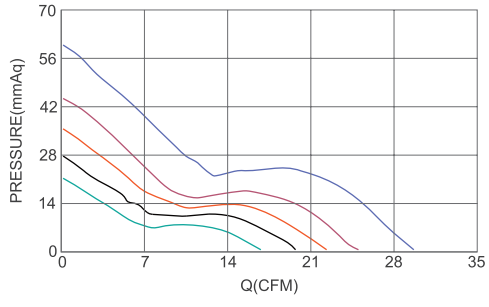

Model No.	Bearing Type	Voltage (VDC)	Current (A)	Power (W)	Speed (RPM)	Air Flow (CFM)	Air Flow (m^3/min)	Air Pressure (mmH2O)	Air Pressure (Inch H2O)	Noise (dBA)
TRD4020x12L	※◎★	12 (7.0~13.5)	0.43	5.2	12000	16.6	0.47	20.7	0.82	53.2
TRD4020x12M	※◎★	12 (7.0~13.5)	0.55	6.6	14000	19.6	0.56	27.1	1.07	53.5
TRD4020x12H	※◎★	12 (7.0~13.5)	0.67	8.0	16000	22.2	0.63	35.0	1.38	55.6
TRD4020x12VH	※◎★	12 (7.0~13.5)	0.85	10.2	18000	24.8	0.71	43.8	1.73	57.7
TRD4020x12SH	※◎★	12 (7.0~13.5)	1.30	15.6	20000	29.5	0.84	59.2	2.33	58.1
TRD4020x24L	※◎★	24 (18.0~26.5)	0.21	5.0	12000	16.6	0.47	20.7	0.82	53.2
TRD4020x24M	※◎★	24 (18.0~26.5)	0.27	6.5	14000	19.6	0.56	27.1	1.07	53.5
TRD4020x24H	※◎★	24 (18.0~26.5)	0.34	8.2	16000	22.2	0.63	35.0	1.38	55.6
TRD4020x24VH	※◎★	24 (18.0~26.5)	0.40	9.6	18000	24.8	0.71	43.8	1.73	57.7
TRD4020x24SH	※◎★	24 (18.0~26.5)	0.65	15.6	20000	29.5	0.84	59.2	2.33	58.1

X Bearing System ※：Sleeve ★：WRB ◎：Ball

★如果您需要的轉速或電壓或功能不在這份清單上，請與我們業務聯繫 Please contact us, if the SPEC you need is not in the list.

★產品詳細數據及功能請參閱承認書 Please see the approval sheet for more information . ★產品規格變更不另行通知 Specifications are subject to change without notice.

DC Axial Fan

TRD4028 SERIES 40X40X28mm

DIMENSIONS DRAWING UNIT：mm

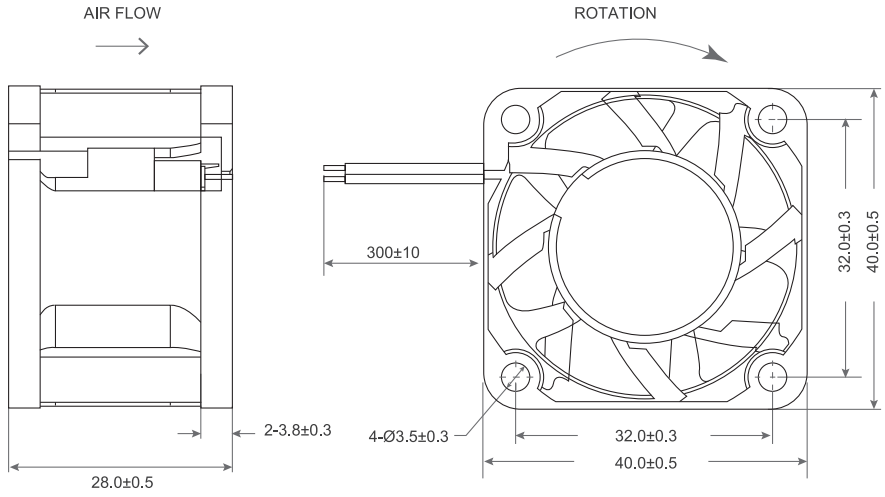

- Frame：Thermoplastic PBT UL94-V0
  外框材質：環保防火PBT
- Impeller：Thermoplastic PBT UL94-V0
  扇葉材質：環保防火PBT
- Bearing：※Sleeve・★WRB・◎Two Ball Bearing
  軸承：※含油・★WRB・◎滾珠軸承
- Unit Weight：50g
  風扇單體重量：50克

P&Q Curve At Rated Voltage

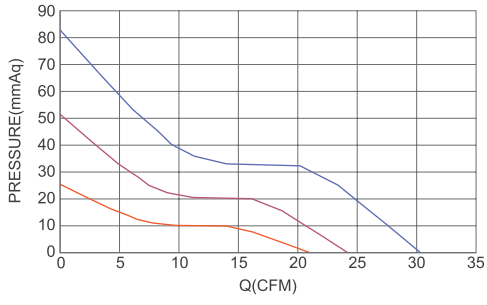

Model No.	Bearing Type	Voltage (VDC)	Current (A)	Power (W)	Speed (RPM)	Air Flow (CFM)	Air Flow (m^3/min)	Air Pressure (mmH_2O)	Air Pressure (Inch H_2O)	Noise (dBA)
TRD4028x12D	※★◎	12 (7.0~14.0)	0.08	0.96	7000	10.27	0.29	7.20	0.28	33.5
TRD4028x12L	※★◎	12 (7.0~14.0)	0.12	1.44	8500	12.48	0.35	10.61	0.42	36.4
TRD4028x12M	※★◎	12 (7.0~14.0)	0.20	2.40	10000	14.50	0.41	14.70	0.58	42.1
TRD4028x12H	※★◎	12 (7.0~14.0)	0.26	3.12	11500	16.88	0.48	19.42	0.76	43.9
TRD4028x12VH	※★◎	12 (7.0~14.0)	0.34	4.08	13000	19.08	0.54	24.82	0.98	48.3
TRD4028x12SH	※★◎	12 (7.0~14.0)	0.44	5.28	14500	21.70	0.61	25.77	1.01	50.3
TRD4028x24D	※★◎	24 (15.0~27.0)	0.04	0.96	7000	10.27	0.29	7.20	0.28	33.5
TRD4028x24L	※★◎	24 (15.0~27.0)	0.06	1.44	8500	12.48	0.35	10.61	0.42	36.4
TRD4028x24M	※★◎	24 (15.0~27.0)	0.10	2.40	10000	14.50	0.41	14.70	0.58	42.1
TRD4028x24H	※★◎	24 (15.0~27.0)	0.13	3.12	11500	16.88	0.48	19.42	0.76	43.9
TRD4028x24VH	※★◎	24 (15.0~27.0)	0.17	4.08	13000	19.08	0.54	24.82	0.98	48.3
TRD4028x24SH	※★◎	24 (15.0~27.0)	0.22	5.28	14500	21.70	0.61	25.77	1.01	50.3
TRD4028x24UH	※★◎	24 (15.0~27.0)	0.31	7.44	18000	23.55	0.67	50.11	1.97	53.5
TRD4028x24HH	※★◎	24 (15.0~27.0)	0.53	12.72	23000	30.10	0.85	81.81	3.22	62.5

x Bearing System ※：Sleeve ★：WRB ◎：Ball

★如果您需要的轉速或電壓或功能不在這份清單上，請與我們業務聯繫 Please contact us, if the SPEC you need is not in the list.

★產品詳細數據及功能請參閱承認書 Please see the approval sheet for more information . ★產品規格變更不另行通知 Specifications are subject to change without notice.

DC Axial Fan

TRD4028 B SERIES 40X40X28mm

DIMENSIONS DRAWING UNIT：mm

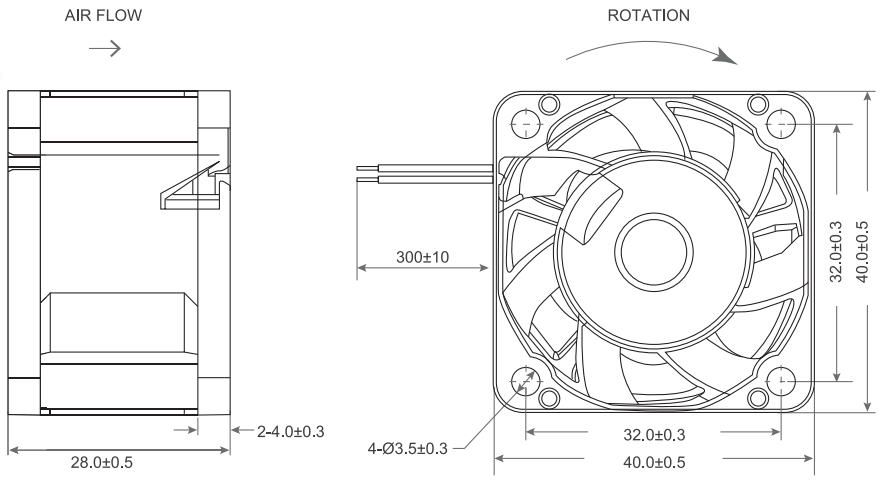

- Frame：Thermoplastic PBT UL94-V0
  外框材質：環保防火PBT
- Impeller：Thermoplastic PBT UL94-V0
  扇葉材質：環保防火PBT
- Bearing：※Sleeve・★WRB・◎Two Ball Bearing
  軸承：※含油・★WRB・◎滾珠軸承
- Unit Weight：50g
  風扇單體重量：50克

P&Q Curve At Rated Voltage

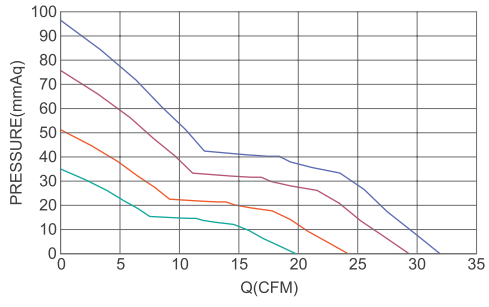

Model No.	Bearing Type	Voltage (VDC)	Current (A)	Power (W)	Speed (RPM)	Air Flow (CFM)	Air Flow (m^3/min)	Air Pressure (mmH2O)	Air Pressure (Inch H2O)	Noise (dBA)
TRD4028x12L	※★◎	12 (7.0~14.0)	0.22	2.64	12000	15.70	0.44	22.27	0.88	45.0
TRD4028x12M	※★◎	12 (7.0~14.0)	0.33	3.96	15000	19.63	0.56	34.80	1.37	49.2
TRD4028x12H	※★◎	12 (7.0~14.0)	0.52	6.24	18000	23.55	0.67	50.11	1.97	53.5
TRD4028x12VH	※★◎	12 (7.0~14.0)	0.95	11.40	22000	28.79	0.81	74.85	2.95	55.7
TRD4028x12SH	※★◎	12 (7.0~14.0)	1.22	14.64	25000	32.71	0.93	96.66	3.81	64.0
TRD4028x24L	※★◎	24 (15.0~27.0)	0.11	2.64	12000	15.70	0.44	22.27	0.88	45.0
TRD4028x24M	※★◎	24 (15.0~27.0)	0.17	3.96	15000	19.63	0.56	34.80	1.37	49.2
TRD4028x24H	※★◎	24 (15.0~27.0)	0.26	6.24	18000	23.55	0.67	50.11	1.97	53.5
TRD4028x24VH	※★◎	24 (15.0~27.0)	0.48	11.40	22000	28.79	0.81	74.85	2.95	55.7
TRD4028x24SH	※★◎	24 (15.0~27.0)	0.61	14.64	25000	32.71	0.93	96.66	3.81	64.0
TRD4028x48L	※★◎	48 (35.0~57.0)	0.06	2.64	12000	15.70	0.44	22.27	0.88	45.0
TRD4028x48M	※★◎	48 (35.0~57.0)	0.08	3.96	15000	19.63	0.56	34.80	1.37	49.2
TRD4028x48H	※★◎	48 (35.0~57.0)	0.13	6.24	18000	23.55	0.67	50.11	1.97	53.5
TRD4028x48VH	※★◎	48 (35.0~57.0)	0.24	11.40	22000	28.79	0.81	74.85	2.95	55.7
TRD4028x48SH	※★◎	48 (35.0~57.0)	0.31	14.64	25000	32.71	0.93	96.66	3.81	64.0

X Bearing System ※：Sleeve ★：WRB ◎：Ball

★如果您需要的轉速或電壓或功能不在這份清單上，請與我們業務聯繫 Please contact us, if the SPEC you need is not in the list.

★產品詳細數據及功能請參閱承認書 Please see the approval sheet for more information . ★產品規格變更不另行通知 Specifications are subject to change without notice.

DC Axial Fan

TRD4028 U SERIES 40X40X28mm

DIMENSIONS DRAWING UNIT：mm

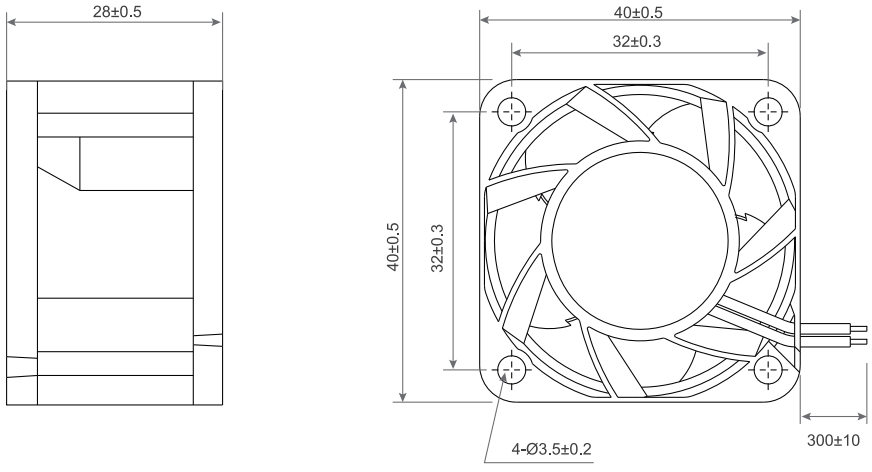

- Frame：Thermoplastic PBT UL94-V0
  外框材質：環保防火PBT
- Impeller：Thermoplastic PBT UL94-V0
  扇葉材質：環保防火PBT
- Bearing：※Sleeve・★WRB・◎Two Ball Bearing
  軸承：※含油・★WRB・◎滾珠軸承
- Unit Weight：40g
  風扇單體重量：40克

P&Q Curve At Rated Voltage

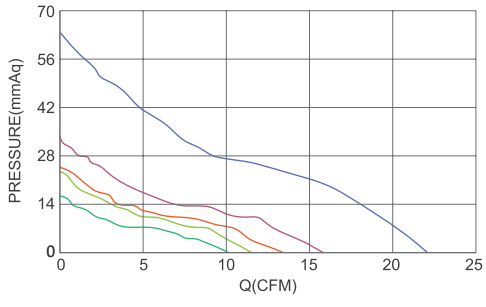

Model No.	Bearing Type	Voltage (VDC)	Current (A)	Power (W)	Speed (RPM)	Air Flow (CFM)	Air Flow (m^3/min)	Air Pressure (mmH_2O)	Air Pressure (Inch H_2O)	Noise (dBA)
TRD4028x12L	※◎★	12 (7.5~13.5)	0.15	1.8	10000	10.26	0.29	16.0	0.63	32.2
TRD4028x12M	※◎★	12 (7.5~13.5)	0.23	2.8	12000	11.76	0.33	22.7	0.89	38.6
TRD4028x12H	※◎★	12 (7.5~13.5)	0.30	3.6	14000	13.43	0.38	24.2	0.95	45.0
TRD4028x12VH	※◎★	12 (7.5~13.5)	0.37	4.4	16000	15.84	0.45	32.0	1.26	51.5
TRD4028x12SH	※◎★	12 (7.5~13.5)	0.60	7.2	22000	22.10	0.63	61.8	2.43	61.0
TRD4028x24L	※◎★	24 (18.0~26.5)	0.08	1.9	10000	10.26	0.29	16.0	0.63	32.2
TRD4028x24M	※◎★	24 (18.0~26.5)	0.12	2.9	12000	11.76	0.33	22.7	0.89	38.6
TRD4028x24H	※◎★	24(18.0~26.5)	0.15	3.6	14000	13.43	0.38	24.2	0.95	45.0
TRD4028x24LVH	※◎★	24 (18.0~26.5)	0.19	4.6	16000	15.84	0.45	32.0	1.26	51.5
TRD4028x24LSH	※◎★	24 (18.0~26.5)	0.30	7.2	22000	22.10	0.63	61.8	2.43	61.0

(x) Bearing System ※：Sleeve ★：WRB ◎：Ball

★如果您需要的轉速或電壓或功能不在這份清單上，請與我們業務聯繫 Please contact us, if the SPEC you need is not in the list.

★產品詳細數據及功能請參閱承認書 Please see the approval sheet for more information . ★產品規格變更不另行通知 Specifications are subject to change without notice.

DC Axial Fan

TRD4028 UB SERIES 40x40x28mm

- Frame：Thermoplastic PBT UL94-V0
  外框材質：環保防火PBT
- Impeller：Thermoplastic PBT UL94-V0
  扇葉材質：環保防火PBT
- Bearing：◎Two Ball bearing
  軸承：◎滾珠軸承
- Unit Weight：49g
  風扇單體重量：49克

P&Q Curve | At Rated Voltage

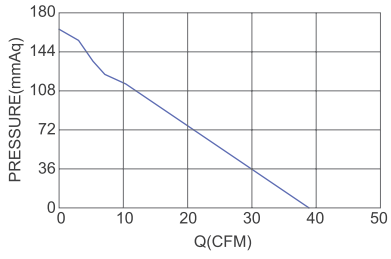

DIMENSIONS DRAWING | UNIT：mm

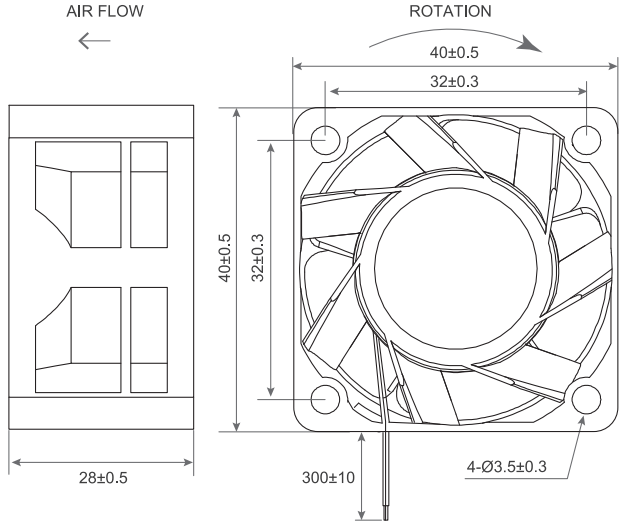

Model No.	Bearing Type	Voltage (VDC)	Current (A)	Power (W)	Speed (RPM)	Air Flow (CFM)	Air Flow (m^3/min)	Air Pressure (mmH₂O)	Air Pressure (Inch H₂O)	Noise (dBA)
TRD4028B12VH	◎	12 (7.5~13.5)	2.8	33.6	32000	38.5	1.09	163.5	6.44	72.2
TRD4028B24VH	◎	24 (18.0~26.5)	1.4	33.6	32000	38.5	1.09	163.5	6.44	72.2

DC Axial Fan

SB4056 SERIES 40X40X56mm

- Frame：Thermoplastic PBT UL94-V0
  外框材質：環保防火PBT
- Impeller：Thermoplastic PBT UL94-V0
  扇葉材質：環保防火PBT
- Bearing：◎Two Ball bearing
  軸承：◎滾珠軸承
- Unit Weight：88.5g
  風扇單體重量：88.5克

P&Q Curve | At Rated Voltage

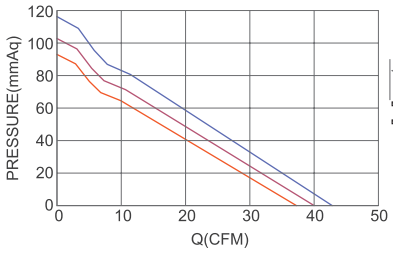

DIMENSIONS DRAWING | UNIT：mm

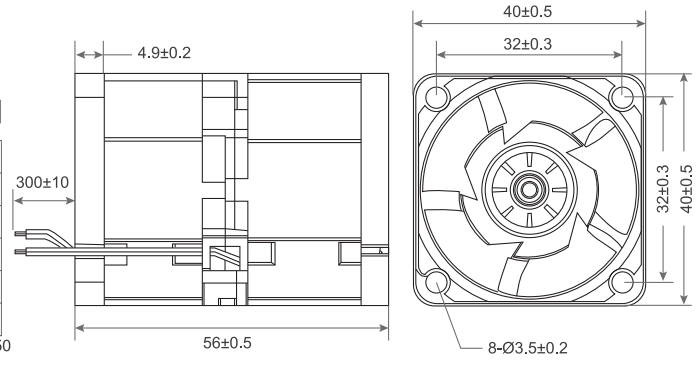

Model No.	Bearing Type	Voltage (VDC)	Current (A)	Power (W)	Speed (RPM)	Air Flow (CFM)	Air Flow (m^3/min)	Air Pressure (mmH₂O)	Air Pressure (Inch H₂O)	Noise (dBA)
SB0405612L	◎	12 (6.0~13.8)	2.6	31.2	18000	38.11	1.08	93.26	3.67	73.5
SB0405612M	◎	12 (6.0~13.8)	2.8	33.6	19000	40.11	1.14	104.91	4.13	74.5
SB0405612H	◎	12 (6.0~13.8)	3.0	36.0	20000	41.94	1.19	116.15	4.58	75.5

Bearing System ※：Sleeve ★：WRB ◎：Ball

★如果您需要的轉速或電壓或功能不在這份清單上，請與我們業務聯繫 Please contact us, if the SPEC you need is not in the list.

★產品詳細數據及功能請參閱承認書 Please see the approval sheet for more information . ★產品規格變更不另行通知 Specifications are subject to change without notice.

DC Axial Fan

TRS5010 SERIES 50X50X10mm

DIMENSIONS DRAWING UNIT：mm

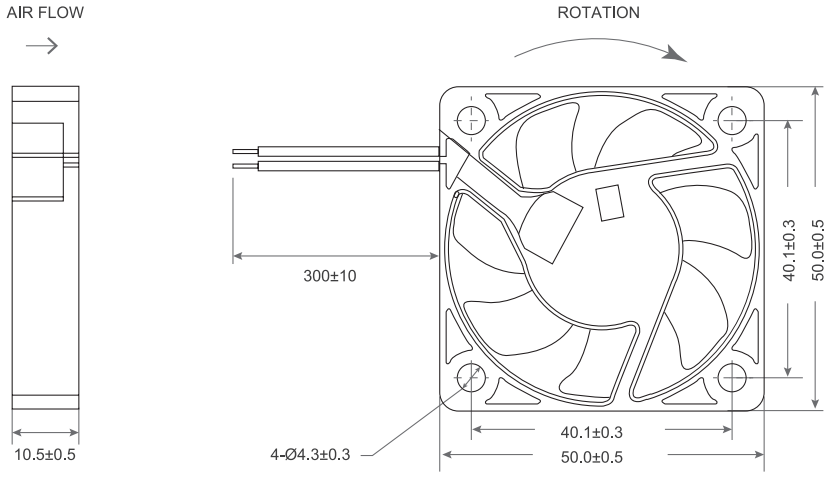

- Frame：Thermoplastic PBT UL94-V0
  外框材質：環保防火PBT
- Impeller：Thermoplastic PBT UL94-V0
  扇葉材質：環保防火PBT
- Bearing：※Sleeve・★WRB・◎Two Ball Bearing
  軸承：※含油・★WRB・◎滾珠軸承
- Unit Weight：16g
  風扇單體重量：16克

P&Q Curve At Rated Voltage

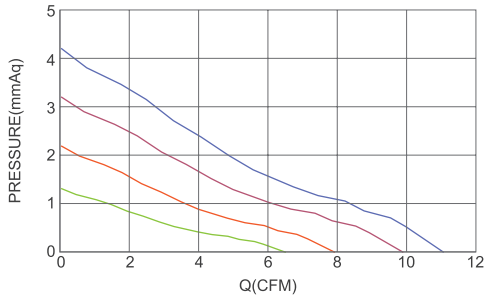

Model No.	Bearing Type	Voltage (VDC)	Current (A)	Power (W)	Speed (RPM)	Air Flow (CFM)	Air Flow (m^3/min)	Air Pressure (mmH_2O)	Air Pressure (Inch H_2O)	Noise (dBA)
TRS5010x05L	※★◎	5 (4.0~5.5)	0.08	0.40	3500	6.25	0.18	1.32	0.05	19.0
TRS5010x05M	※★◎	5 (4.0~5.5)	0.17	0.85	4500	7.98	0.23	2.16	0.09	25.8
TRS5010x05H	※★◎	5 (4.0~5.5)	0.25	1.25	5500	9.72	0.28	3.20	0.13	31.8
TRS5010x12L	※★◎	12 (7.0~14.0)	0.05	0.60	3500	6.25	0.18	1.32	0.05	19.0
TRS5010x12M	※★◎	12 (7.0~14.0)	0.09	1.08	4500	7.98	0.23	2.16	0.09	25.8
TRS5010x12H	※★◎	12 (7.0~14.0)	0.13	1.56	5500	9.72	0.28	3.20	0.13	31.8
TRS5010x12VH	※★◎	12 (7.0~14.0)	0.15	1.80	6300	11.10	0.31	4.18	0.16	34.0
TRS5010x24M	※★◎	24 (15.0~27.0)	0.05	1.20	4500	7.98	0.23	2.16	0.09	25.8
TRS5010x24H	※★◎	24 (15.0~27.0)	0.07	1.68	5500	9.72	0.28	3.20	0.13	31.8
TRS5010x24VH	※★◎	24 (15.0~27.0)	0.10	2.40	6300	11.10	0.31	4.18	0.16	34.0

Screw Holes：

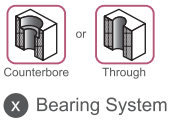

X Bearing System ※：Sleeve ★：WRB ◎：Ball

★如果您需要的轉速或電壓或功能不在這份清單上，請與我們業務聯繫 Please contact us, if the SPEC you need is not in the list.

★產品詳細數據及功能請參閱承認書 Please see the approval sheet for more information . ★產品規格變更不另行通知 Specifications are subject to change without notice.

DC Axial Fan

TRS5010 U SERIES 50X50X10mm

DIMENSIONS DRAWING UNIT：mm

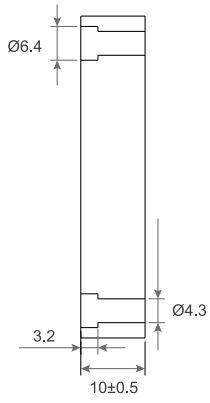

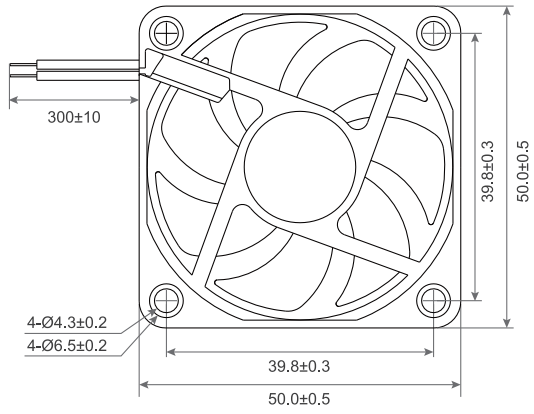

- Frame：Thermoplastic PBT UL94-V0
  外框材質：環保防火PBT
- Impeller：Thermoplastic PBT UL94-V0
  扇葉材質：環保防火PBT
- Bearing：※Sleeve・★WRB・◎Two Ball Bearing
  軸承：※含油・★WRB・◎滾珠軸承
- Unit Weight：15g
  風扇單體重量：15克

P&Q Curve At Rated Voltage

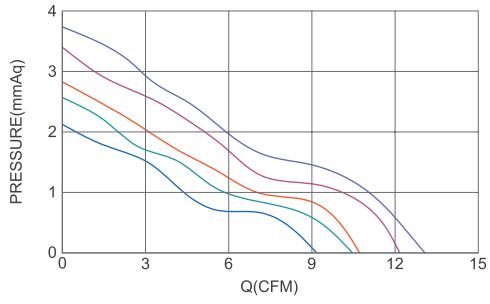

Model No.	Bearing Type	Voltage (VDC)	Current (A)	Power (W)	Speed (RPM)	Air Flow (CFM)	Air Flow (m^3/min)	Air Pressure (mmH2O)	Air Pressure (Inch H2O)	Noise (dBA)
TRS5010x05D	※◎★	5 (3.0~6.0)	0.07	0.36	4000	8.14	0.23	1.65	0.065	26.8
TRS5010x05L	※◎★	5 (3.0~6.0)	0.10	0.48	4500	9.09	0.26	2.05	0.081	29.7
TRS5010x05M	※◎★	5 (3.0~6.0)	0.12	0.60	5000	10.50	0.30	2.58	0.102	31.0
TRS5010x05H	※◎★	5 (3.0~6.0)	0.14	0.72	5500	10.80	0.31	2.84	0.112	33.5
TRS5010x05VH	※◎★	5 (3.0~6.0)	0.17	0.84	6000	12.10	0.35	3.34	0.131	34.2
TRS5010x05SH	※◎★	5 (3.0~6.0)	0.19	0.96	6500	13.40	0.38	3.85	0.152	36.8
TRS5010x12D	※◎★	12 (8.5~13.5)	0.03	0.36	4000	8.14	0.23	1.65	0.065	26.8
TRS5010x12L	※◎★	12 (8.5~13.5)	0.04	0.48	4500	9.09	0.26	2.05	0.081	29.7
TRS5010x12M	※◎★	12 (8.5~13.5)	0.05	0.60	5000	10.50	0.30	2.58	0.102	31.0
TRS5010x12H	※◎★	12 (8.5~13.5)	0.06	0.72	5500	10.80	0.31	2.84	0.112	33.5
TRS5010x12VH	※◎★	12 (8.5~13.5)	0.07	0.84	6000	12.10	0.35	3.34	0.131	34.2
TRS5010x12SH	※◎★	12 (8.5~13.5)	0.08	0.96	6500	13.40	0.38	3.85	0.152	36.8

x Bearing System ※：Sleeve ★：WRB ◎：Ball

★如果您需要的轉速或電壓或功能不在這份清單上，請與我們業務聯繫 Please contact us, if the SPEC you need is not in the list.

★產品詳細數據及功能請參閱承認書 Please see the approval sheet for more information . ★產品規格變更不另行通知 Specifications are subject to change without notice.

DC Axial Fan

SRL5010 SERIES 50X50X10mm

DIMENSIONS DRAWING UNIT：mm

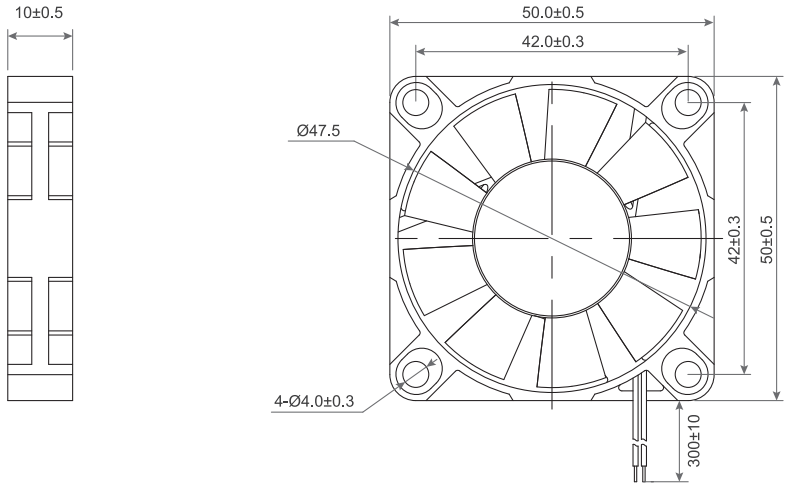

- Frame：Thermoplastic PBT UL94-V0
  外框材質：環保防火PBT
- Impeller：Thermoplastic PBT UL94-V0
  扇葉材質：環保防火PBT
- Bearing：※Sleeve・★WRB・◎Two Ball Bearing
  軸承：※含油・★WRB・◎滾珠軸承
- Unit Weight：21g
  風扇單體重量：21克

P&Q Curve At Rated Voltage

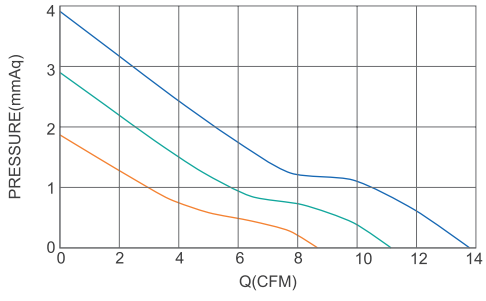

Model No.	Bearing Type	Voltage (VDC)	Current (A)	Power (W)	Speed (RPM)	Air Flow (CFM)	Air Flow (m^3/min)	Air Pressure (mmH_2O)	Air Pressure (Inch H_2O)	Noise (dBA)
SRLx0501005LB	※★◎	5 (3.5~5.0)	0.15	0.80	4000	8.67	0.25	1.88	0.07	29.7
SRLx0501005MB	※★◎	5 (3.5~5.0)	0.20	1.00	5000	11.14	0.32	2.89	0.11	31.4
SRLx0501005HB	※★◎	5 (3.5~5.0)	0.30	1.50	6000	13.78	0.39	3.92	0.15	35.1
SRLx0501012LB	※★◎	12 (7.0~13.8)	0.06	0.70	4000	8.67	0.25	1.88	0.07	29.7
SRLx0501012MB	※★◎	12 (5.0~13.8)	0.10	1.20	5000	11.14	0.32	2.89	0.11	31.4
SRLx0501012HB	※★◎	12 (5.0~13.8)	0.15	1.80	6000	13.78	0.39	3.92	0.15	35.1

x Bearing System ※：Sleeve ★：WRB ◎：Ball

★如果您需要的轉速或電壓或功能不在這份清單上，請與我們業務聯繫 Please contact us, if the SPEC you need is not in the list.

★產品詳細數據及功能請參閱承認書 Please see the approval sheet for more information . ★產品規格變更不另行通知 Specifications are subject to change without notice.

DC Axial Fan

TRS5015 SERIES 50X50X15mm

DIMENSIONS DRAWING UNIT：mm

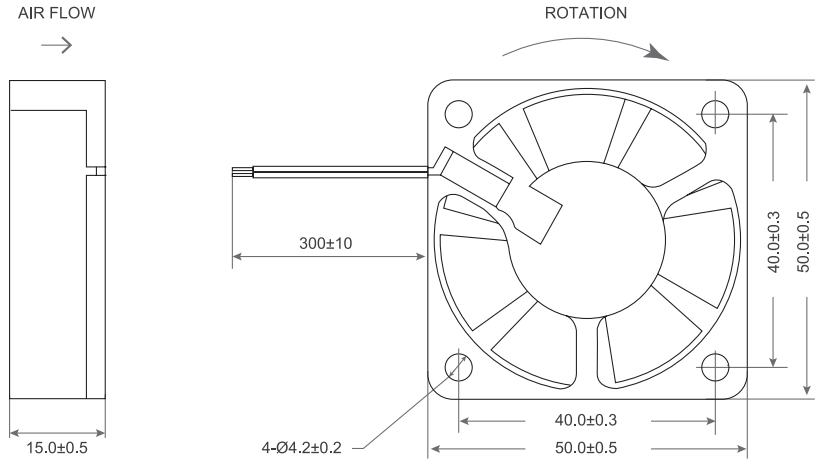

- ●Frame：Thermoplastic PBT UL94-V0
  外框材質：環保防火PBT
- ●Impeller：Thermoplastic PBT UL94-V0
  扇葉材質：環保防火PBT
- ●Bearing：※Sleeve・★WRB・◎Two Ball Bearing
  軸承：※含油・★WRB・◎滾珠軸承
- ●Unit Weight：24g
  風扇單體重量：24克

P&Q Curve At Rated Voltage

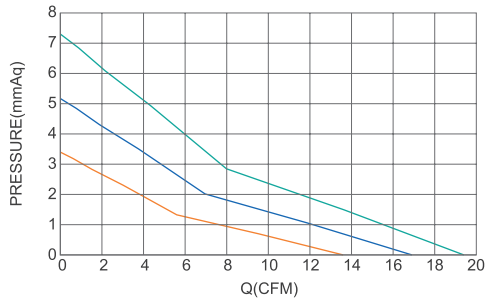

Model No.	Bearing Type	Voltage (VDC)	Current (A)	Power (W)	Speed (RPM)	Air Flow (CFM)	Air Flow (m^3/min)	Air Pressure (mmH2O)	Air Pressure (Inch H2O)	Noise (dBA)
TRS5015x05L	※★◎	5 (4.0~5.5)	0.12	0.60	3500	10.55	0.31	2.12	0.08	21.5
TRS5015x05M	※★◎	5 (4.0~5.5)	0.18	0.90	4500	13.48	0.38	3.46	0.14	27.8
TRS5015x05H	※★◎	5 (4.0~5.5)	0.34	1.70	5500	16.41	0.46	5.13	0.20	31.2
TRS5015x12L	※★◎	12 (7.0~14.0)	0.06	0.72	3500	10.55	0.31	2.12	0.08	21.5
TRS5015x12M	※★◎	12 (7.0~14.0)	0.09	1.08	4500	13.48	0.38	3.46	0.14	27.8
TRS5015x12H	※★◎	12 (7.0~14.0)	0.14	1.68	5500	16.41	0.46	5.13	0.20	31.2
TRS5015x12VH	※★◎	12 (7.0~14.0)	0.19	2.28	6500	19.35	0.55	7.12	0.28	35.6
TRS5015x24H	※★◎	24 (15.0~27.0)	0.07	1.68	5500	16.41	0.46	5.13	0.20	31.2
TRS5015x24VH	※★◎	24 (15.0~27.0)	0.10	2.40	6500	19.35	0.55	7.12	0.28	35.6

x Bearing System ※：Sleeve ★：WRB ◎：Ball

★如果您需要的轉速或電壓或功能不在這份清單上，請與我們業務聯繫 Please contact us, if the SPEC you need is not in the list.

★產品詳細數據及功能請參閱承認書 Please see the approval sheet for more information . ★產品規格變更不另行通知 Specifications are subject to change without notice.

DC Axial Fan

TRS5015 G SERIES 50X50X15mm

DIMENSIONS DRAWING UNIT：mm

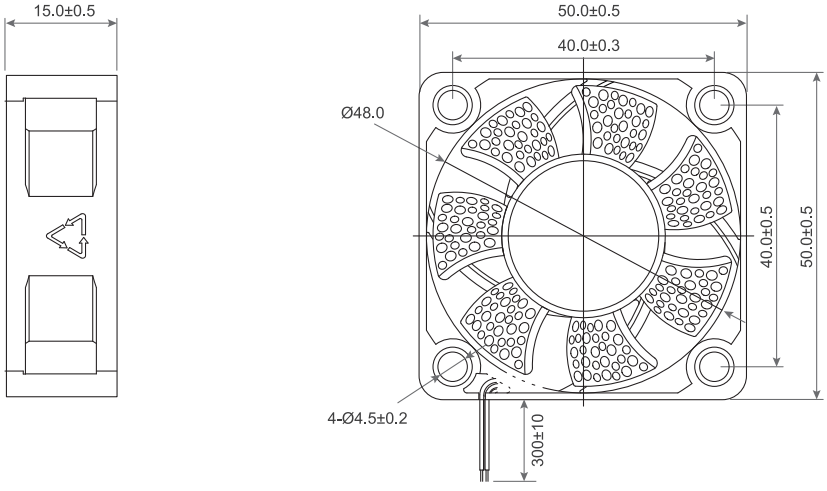

- Frame：Thermoplastic PBT UL94-V0
  外框材質：環保防火PBT
- Impeller：Thermoplastic PBT UL94-V0
  扇葉材質：環保防火PBT
- Bearing：※Sleeve・◎Two Ball Bearing
  軸承：※含油・◎滾珠軸承
- Unit Weight：25.6g
  風扇單體重量：25.6克

P&Q Curve At Rated Voltage

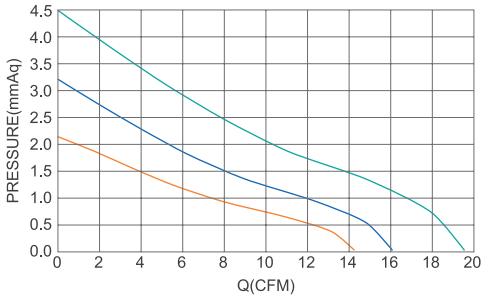

Model No.	Bearing Type	Voltage (VDC)	Current (A)	Power (W)	Speed (RPM)	Air Flow (CFM)	Air Flow (m^3/min)	Air Pressure (mmH_2O)	Air Pressure (Inch H_2O)	Noise (dBA)
TRS5015B12L	※◎	12 (7.0~13.8)	0.10	1.20	4000	14.35	0.41	2.14	0.08	20.1
TRS5015B12M	※◎	12 (7.0~13.8)	0.15	1.80	5000	16.18	0.46	3.18	0.12	25.3
TRS5015B12H	※◎	12 (7.0~13.8)	0.20	2.40	6000	19.69	0.56	4.47	0.18	29.6

X Bearing System ※：Sleeve ★：WRB ◎：Ball

★如果您需要的轉速或電壓或功能不在這份清單上，請與我們業務聯繫 Please contact us, if the SPEC you need is not in the list.

★產品詳細數據及功能請參閱承認書 Please see the approval sheet for more information . ★產品規格變更不另行通知 Specifications are subject to change without notice.

DC Axial Fan

TRS5020 SERIES 50X50X20mm

DIMENSIONS DRAWING UNIT：mm

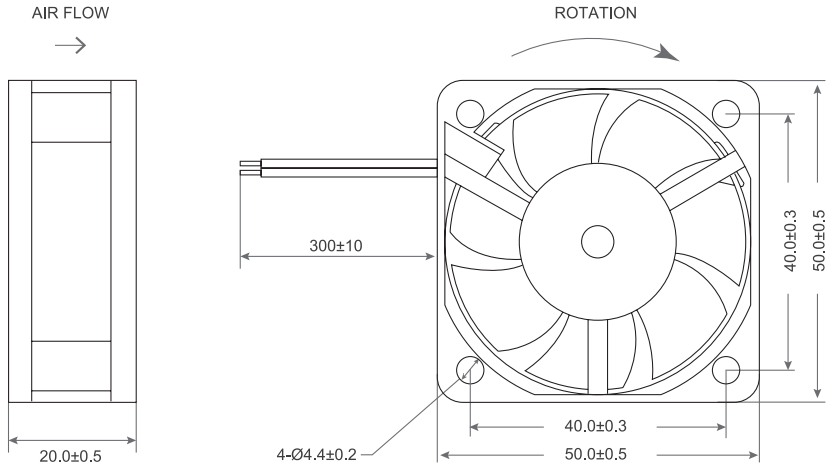

- Frame：Thermoplastic PBT UL94-V0
  外框材質：環保防火PBT
- Impeller：Thermoplastic PBT UL94-V0
  扇葉材質：環保防火PBT
- Bearing：※Sleeve・★WRB・◎Two Ball Bearing
  軸承：※含油・★WRB・◎滾珠軸承
- Unit Weight：32g
  風扇單體重量：32克

P&Q Curve At Rated Voltage

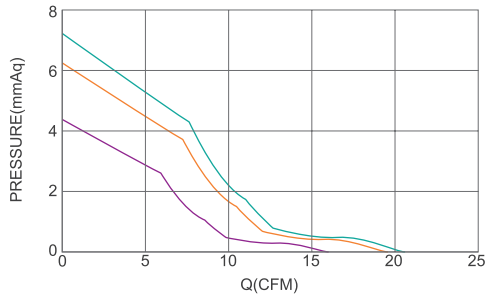

Model No.	Bearing Type	Voltage (VDC)	Current (A)	Power (W)	Speed (RPM)	Air Flow (CFM)	Air Flow (m^3/min)	Air Pressure (mmH_2O)	Air Pressure (Inch H_2O)	Noise (dBA)
TRS5020x05L	※★◎	5 (4.0~5.5)	0.16	0.80	3200	10.04	0.28	1.63	0.06	25.0
TRS5020x05M	※★◎	5 (4.0~5.5)	0.32	1.60	4200	13.17	0.37	2.80	0.11	28.8
TRS5020x05SH	※ ◎	5 (4.0~5.5)	0.67	3.36	7000	20.53	0.58	7.26	0.29	41.0
TRS5020x12L	※★◎	12 (7.0~14.0)	0.06	0.72	3200	10.04	0.28	1.63	0.06	25.0
TRS5020x12M	※★◎	12 (7.0~14.0)	0.14	1.68	4200	13.17	0.37	2.80	0.11	28.8
TRS5020x12H	※★◎	12 (7.0~14.0)	0.18	2.16	5200	16.31	0.46	4.29	0.17	33.2
TRS5020x12VH	※★◎	12 (7.0~14.0)	0.22	2.64	6200	19.44	0.55	6.10	0.24	37.5
TRS5020x12SH	※ ◎	12 (7.0~14.0)	0.28	3.36	7000	20.53	0.58	7.26	0.29	41.0
TRS5020x24H	※★◎	24 (15.0~27.0)	0.09	2.16	5200	16.31	0.46	4.29	0.17	33.2
TRS5020x24VH	※★◎	24 (15.0~27.0)	0.11	2.64	6200	19.44	0.55	6.10	0.24	37.5
TRS5020x24SH	※ ◎	24 (15.0~27.0)	0.14	3.36	7000	20.53	0.58	7.26	0.29	41.0

x Bearing System ※：Sleeve ★：WRB ◎：Ball

★如果您需要的轉速或電壓或功能不在這份清單上，請與我們業務聯繫 Please contact us, if the SPEC you need is not in the list.

★產品詳細數據及功能請參閱承認書 Please see the approval sheet for more information . ★產品規格變更不另行通知 Specifications are subject to change without notice.

DC Axial Fan

TRS5025 U SERIES 50X50X25mm

DIMENSIONS DRAWING UNIT：mm

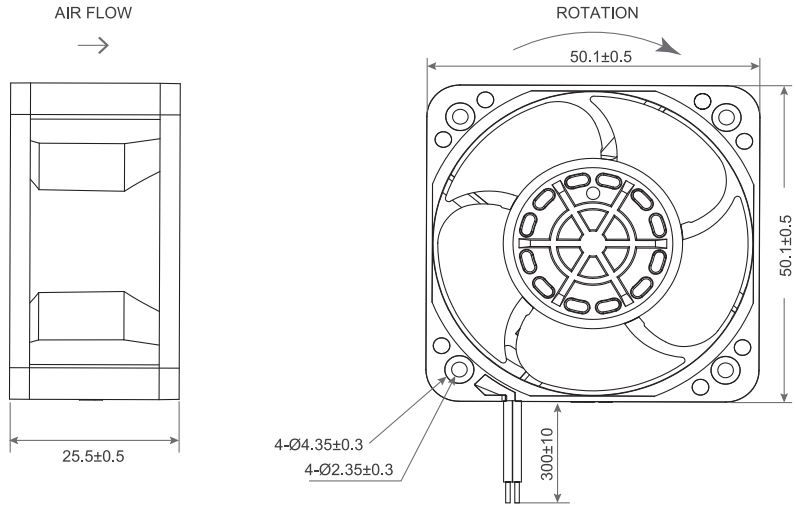

- Frame：Thermoplastic PBT UL94-V0
  外框材質：環保防火PBT
- Impeller：Thermoplastic PBT UL94-V0
  扇葉材質：環保防火PBT
- Bearing：※Sleeve・★WRB・◎Two Ball Bearing
  軸承：※含油・★WRB・◎滾珠軸承
- Unit Weight：47g
  風扇單體重量：47克

P&Q Curve At Rated Voltage

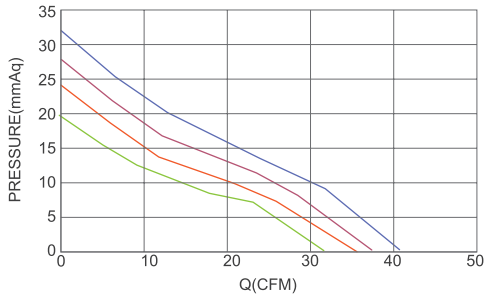

Model No.	Bearing Type	Voltage (VDC)	Current (A)	Power (W)	Speed (RPM)	Air Flow (CFM)	Air Flow (m^3/min)	Air Pressure (mmH_2O)	Air Pressure (Inch H_2O)	Noise (dBA)
TRS5025x12L	※★◎	12 (7.0~13.5)	0.30	3.60	11000	31.7	0.89	19.0	0.75	48.4
TRS5025x12M	※★◎	12 (7.0~13.5)	0.37	4.44	12000	35.5	1.01	24.6	0.97	52.2
TRS5025x12H	※★◎	12 (7.0~13.5)	0.50	6.00	13000	37.5	1.06	27.5	1.08	55.9
TRS5020x12VH	※★◎	12 (7.0~13.5)	0.56	6.72	14000	40.6	1.15	31.6	1.25	56.8
TRS5025x24L	※★◎	24 (18.0~26.5)	0.15	3.60	11000	31.7	0.89	19.0	0.75	48.4
TRS5025x24M	※★◎	24 (18.0~26.5)	0.19	4.44	12000	35.5	1.01	24.6	0.97	52.2
TRS5025x24H	※★◎	24 (18.0~26.5)	0.25	6.00	13000	37.5	1.06	27.5	1.08	55.9
TRS5025x24VH	※★◎	24 (18.0~26.5)	0.28	6.72	14000	40.6	1.15	31.6	1.25	56.8

X Bearing System ※：Sleeve ★：WRB ◎：Ball

★如果您需要的轉速或電壓或功能不在這份清單上，請與我們業務聯繫 Please contact us, if the SPEC you need is not in the list.

★產品詳細數據及功能請參閱承認書 Please see the approval sheet for more information . ★產品規格變更不另行通知 Specifications are subject to change without notice.

DC Axial Fan

TRS6010 SERIES 60X60X10mm

DIMENSIONS DRAWING UNIT：mm

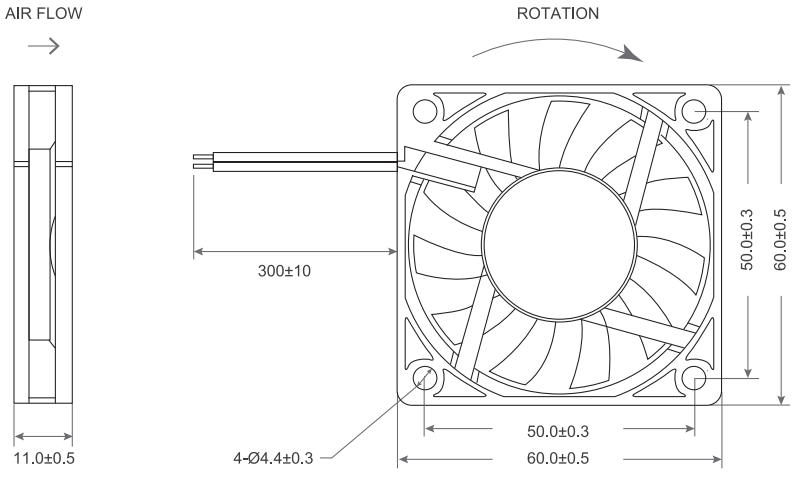

- Frame：Thermoplastic PBT UL94-V0
  外框材質：環保防火PBT
- Impeller：Thermoplastic PBT UL94-V0
  扇葉材質：環保防火PBT
- Bearing：※Sleeve・★WRB・◎Two Ball Bearing
  軸承：※含油・★WRB・◎滾珠軸承
- Unit Weight：26g
  風扇單體重量：26克

P&Q Curve At Rated Voltage

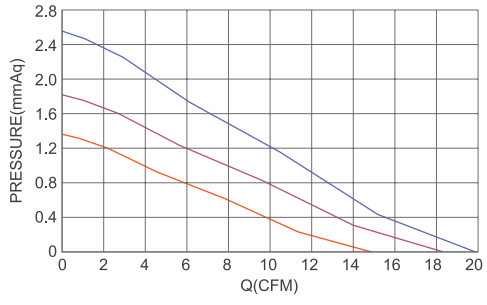

Model No.	Bearing Type	Voltage (VDC)	Current (A)	Power (W)	Speed (RPM)	Air Flow (CFM)	Air Flow (m^3/min)	Air Pressure (mmH_2O)	Air Pressure (Inch H_2O)	Noise (dBA)
TRS6010x05L	※★◎	5 (4.0~5.5)	0.15	0.75	2500	12.35	0.35	1.01	0.04	21.6
TRS6010x05M	※★◎	5 (4.0~5.5)	0.27	1.35	3000	14.82	0.42	1.45	0.06	24.0
TRS6010x05H	※★◎	5 (4.0~5.5)	0.34	1.70	3500	18.23	0.52	1.82	0.07	26.7
TRS6010x12L	※★◎	12 (7.0~14.0)	0.06	0.72	2500	12.35	0.35	1.01	0.04	21.6
TRS6010x12M	※★◎	12 (7.0~14.0)	0.08	0.90	3000	14.82	0.42	1.45	0.06	24.0
TRS6010x12H	※★◎	12 (7.0~14.0)	0.09	1.08	3500	18.23	0.52	1.82	0.07	26.7
TRS6010x12VH	※★◎	12 (7.0~14.0)	0.11	1.32	4000	19.76	0.56	2.58	0.10	29.2
TRS6010x24M	※★◎	24 (15.0~27.0)	0.04	0.09	3000	15.31	0.43	1.55	0.06	24.0
TRS6010x24H	※★◎	24 (15.0~27.0)	0.05	1.08	3500	17.80	0.50	2.10	0.08	26.7
TRS6010x24VH	※★◎	24 (15.0~27.0)	0.06	1.32	4000	19.76	0.56	2.58	0.10	29.2

Screw Holes：

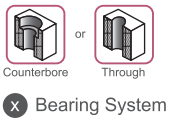

X Bearing System ※：Sleeve ★：WRB ◎：Ball

★如果您需要的轉速或電壓或功能不在這份清單上，請與我們業務聯繫 Please contact us, if the SPEC you need is not in the list.
★產品詳細數據及功能請參閱承認書 Please see the approval sheet for more information . ★產品規格變更不另行通知 Specifications are subject to change without notice.

DC Axial Fan

TRS6015 SERIES 60X60X15mm

DIMENSIONS DRAWING UNIT：mm

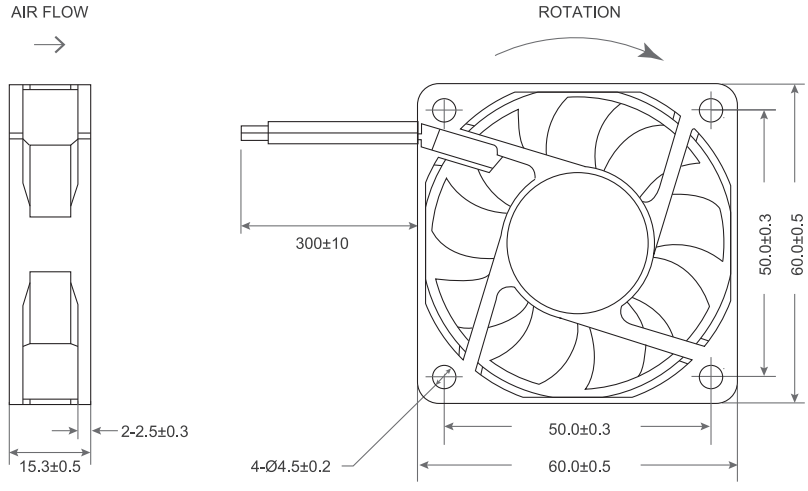

- Frame：Thermoplastic PBT UL94-V0
  外框材質：環保防火PBT
- Impeller：Thermoplastic PBT UL94-V0
  扇葉材質：環保防火PBT
- Bearing：※Sleeve・★WRB・◎Two Ball Bearing
  軸承：※含油・★WRB・◎滾珠軸承
- Unit Weight：28g
  風扇單體重量：28克

P&Q Curve At Rated Voltage

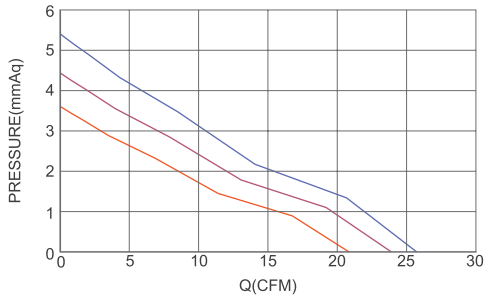

Model No.	Bearing Type	Voltage (VDC)	Current (A)	Power (W)	Speed (RPM)	Air Flow (CFM)	Air Flow (m^3/min)	Air Pressure (mmH_2O)	Air Pressure (Inch H_2O)	Noise (dBA)
TRS6015x05D	※★◎	5 (4.0~5.5)	0.29	1.45	3000	13.01	0.37	1.86	0.07	29.2
TRS6015x05L	※★◎	5 (4.0~5.5)	0.36	1.80	3500	16.20	0.46	2.18	0.09	30.0
TRS6015x05M	※★◎	5 (4.0~5.5)	0.16	2.30	4000	18.51	0.52	2.85	0.11	31.5
TRS6015x12D	※★◎	12 (7.0~14.0)	0.04	0.48	3000	13.01	0.37	1.86	0.07	29.2
TRS6015x12L	※★◎	12 (7.0~14.0)	0.05	0.60	3500	16.20	0.46	2.18	0.10	30.0
TRS6015x12M	※★◎	12 (7.0~14.0)	0.10	1.20	4000	18.51	0.52	2.85	0.11	31.5
TRS6015x12H	※★◎	12 (7.0~14.0)	0.16	1.92	4500	20.82	0.59	3.60	0.14	34.5
TRS6015x12VH	※★◎	12 (7.0~14.0)	0.18	2.16	5000	23.14	0.65	4.45	0.18	35.4
TRS6015x12SH	※★◎	12 (7.0~14.0)	0.20	2.40	5500	25.45	0.72	5.38	0.21	38.0
TRS6015x24L	※★◎	24 (15.0~27.0)	0.03	0.60	3500	16.20	0.46	2.18	0.09	30.0
TRS6015x24M	※★◎	24 (15.0~27.0)	0.05	1.20	4000	18.51	0.52	2.85	0.11	31.5
TRS6015x24H	※★◎	24 (15.0~27.0)	0.08	1.92	4500	20.82	0.59	3.60	0.14	34.5
TRS6015x24VH	※★◎	24 (15.0~27.0)	0.09	2.16	5000	23.14	0.65	4.45	0.18	35.4
TRS6015x24SH	※★◎	24 (15.0~27.0)	0.10	2.40	5500	25.45	0.72	5.38	0.21	38.0

Screw Holes：

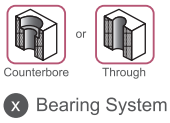

X Bearing System ※：Sleeve ★：WRB ◎：Ball

★如果您需要的轉速或電壓或功能不在這份清單上，請與我們業務聯繫 Please contact us, if the SPEC you need is not in the list.

★產品詳細數據及功能請參閱承認書 Please see the approval sheet for more information . ★產品規格變更不另行通知 Specifications are subject to change without notice.

DC Axial Fan

TRS6015 U SERIES 60X60X15mm

DIMENSIONS DRAWING UNIT：mm

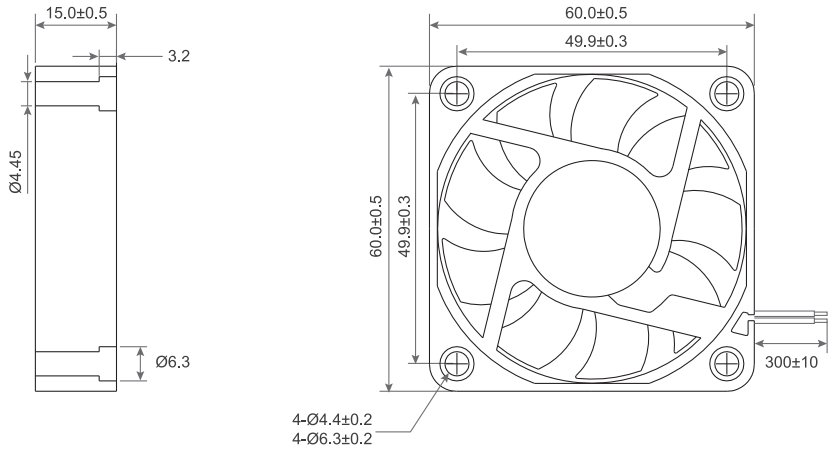

- Frame：Thermoplastic PBT UL94-V0
  外框材質：環保防火PBT
- Impeller：Thermoplastic PBT UL94-V0
  扇葉材質：環保防火PBT
- Bearing：※Sleeve・★WRB・◎Two Ball Bearing
  軸承：※含油・★WRB・◎滾珠軸承
- Unit Weight：38g
  風扇單體重量：38克

P&Q Curve At Rated Voltage

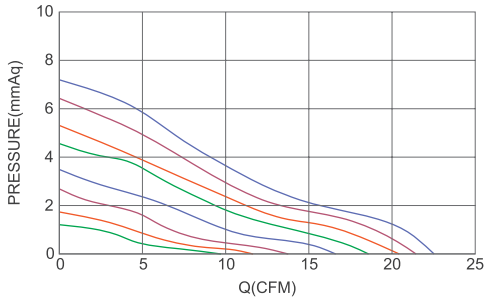

Model No.	Bearing Type	Voltage (VDC)	Current (A)	Power (W)	Speed (RPM)	Air Flow (CFM)	Air Flow (m^3/min)	Air Pressure (mmH2O)	Air Pressure (Inch H2O)	Noise (dBA)
TRS6015x05D	※★◎	5 (1.8~6.0)	0.14	0.72	2000	9.4	0.27	1.34	0.05	21.1
TRS6015x05L	※★◎	5 (1.8~6.0)	0.19	0.96	3000	11.5	0.33	1.86	0.07	24.8
TRS6015x05M	※★◎	5 (1.8~6.0)	0.24	1.20	3500	14.2	0.41	2.61	0.10	29.8
TRS6015x05H	※★◎	5 (1.8~6.0)	0.29	1.44	4000	16.4	0.47	3.50	0.14	31.2
TRS6015x12D	※★◎	12 (7.0~13.5)	0.06	0.72	2000	9.4	0.27	1.34	0.05	21.1
TRS6015x12L	※★◎	12 (7.0~13.5)	0.08	0.96	3000	11.5	0.33	1.86	0.07	24.8
TRS6015x12M	※★◎	12 (7.0~13.5)	0.10	1.20	3500	14.2	0.41	2.61	0.10	29.8
TRS6015x12H	※★◎	12 (7.0~13.5)	0.12	1.44	4000	16.4	0.47	3.50	0.14	31.2
TRS6015x12VH	※★◎	12 (7.0~13.5)	0.14	1.68	4500	18.3	0.52	4.35	0.17	34.8
TRS6015x12SH	※★◎	12 (7.0~13.5)	0.16	1.92	5000	20.5	0.58	5.34	0.21	36.6
TRS6015x12UH	※★◎	12 (7.0~13.5)	0.18	2.16	5500	21.1	0.60	6.35	0.25	39.0
TRS6015x12XH	※★◎	12 (7.0~13.5)	0.20	2.40	6000	22.4	0.64	7.33	0.29	41.0
TRS6015x24D	※★◎	24 (18~26.5)	0.03	0.72	2000	9.4	0.27	1.34	0.05	21.1
TRS6015x24L	※★◎	24 (18.0~26.5)	0.04	0.96	3000	11.5	0.33	1.86	0.07	24.8
TRS6015x24M	※★◎	24 (18.0~26.5)	0.05	1.20	3500	14.2	0.41	2.61	0.10	29.8
TRS6015x24H	※★◎	24 (18.0~26.5)	0.06	1.44	4000	16.4	0.47	3.50	0.14	31.2
TRS6015x24VH	※★◎	24 (18.0~26.5)	0.07	1.68	4500	18.3	0.52	4.35	0.17	34.8
TRS6015x24SH	※★◎	24 (18.0~26.5)	0.08	1.92	5000	20.5	0.58	5.34	0.21	36.6
TRS6015x24UH	※★◎	24 (18.0~26.5)	0.09	2.16	5500	21.1	0.60	6.35	0.25	39.0
TRS6015x24XH	※★◎	24 (18.0~26.5)	0.10	2.40	6000	22.4	0.64	7.33	0.29	41.0

(x) Bearing System ※：Sleeve ★：WRB ◎：Ball

★如果您需要的轉速或電壓或功能不在這份清單上，請與我們業務聯繫 Please contact us, if the SPEC you need is not in the list.
★產品詳細數據及功能請參閱承認書 Please see the approval sheet for more information . ★產品規格變更不另行通知 Specifications are subject to change without notice.

DC Axial Fan

TRS6020 SERIES 60X60X20mm

DIMENSIONS DRAWING UNIT：mm

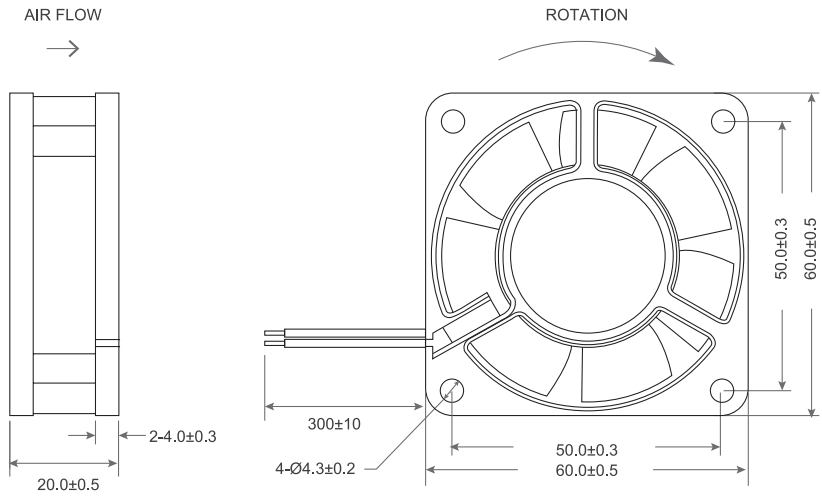

- Frame：Thermoplastic PBT UL94-V0
  外框材質：環保防火PBT
- Impeller：Thermoplastic PBT UL94-V0
  扇葉材質：環保防火PBT
- Bearing：※Sleeve・★WRB・◎Two Ball Bearing
  軸承：※含油・★WRB・◎滾珠軸承
- Unit Weight：50g
  風扇單體重量：50克

P&Q Curve At Rated Voltage

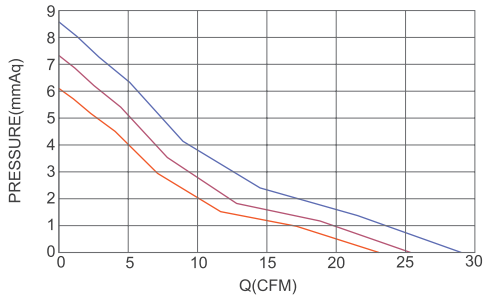

Model No.	Bearing Type	Voltage (VDC)	Current (A)	Power (W)	Speed (RPM)	Air Flow (CFM)	Air Flow (m^3/min)	Air Pressure (mmH_2O)	Air Pressure (Inch H_2O)	Noise (dBA)
TRS6020x05D	※★◎	5 (4.0~5.5)	0.14	0.70	3000	13.69	0.39	2.17	0.09	26.5
TRS6020x05L	※★◎	5 (4.0~5.5)	0.29	1.45	4000	18.25	0.52	3.85	0.15	32.0
TRS6020x12D	※★◎	12 (7.0~14.0)	0.06	0.73	3000	13.69	0.39	2.17	0.09	26.5
TRS6020x12L	※★◎	12 (7.0~14.0)	0.14	1.68	4000	18.25	0.52	3.85	0.15	32.0
TRS6020x12M	※★◎	12 (7.0~14.0)	0.15	1.80	4500	20.53	0.58	4.87	0.19	38.1
TRS6020x12H	※★◎	12 (7.0~14.0)	0.16	1.92	5000	22.81	0.65	6.02	0.24	41.2
TRS6020x12VH	※★◎	12 (7.0~14.0)	0.17	2.04	5500	25.09	0.71	7.28	0.29	43.7
TRS6020x24L	※★◎	24 (15.0~27.0)	0.07	1.68	4000	18.25	0.52	3.85	0.15	32.0
TRS6020x24M	※★◎	24 (15.0~27.0)	0.08	1.80	4500	20.53	0.58	4.87	0.19	38.1
TRS6020x24H	※★◎	24 (15.0~27.0)	0.08	1.92	5000	22.81	0.65	6.02	0.24	41.2
TRS6020x24VH	※★◎	24 (15.0~27.0)	0.09	2.04	5500	25.09	0.71	7.28	0.29	43.7
TRS6020x24SH	※★◎	24 (15.0~27.0)	0.11	2.64	6000	28.41	0.80	8.54	0.34	45.5

(x) Bearing System ※：Sleeve ★：WRB ◎：Ball

★如果您需要的轉速或電壓或功能不在這份清單上，請與我們業務聯繫 Please contact us, if the SPEC you need is not in the list.

★產品詳細數據及功能請參閱承認書 Please see the approval sheet for more information . ★產品規格變更不另行通知 Specifications are subject to change without notice.

DC Axial Fan

TRS6020 B SERIES 60x60x20mm

DIMENSIONS DRAWING UNIT：mm

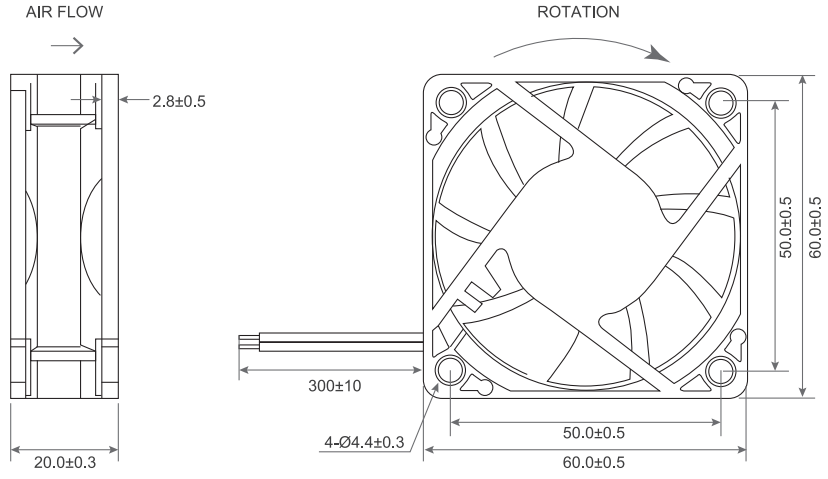

- Frame：Thermoplastic PBT UL94-V0
  外框材質：環保防火PBT
- Impeller：Thermoplastic PBT UL94-V0
  扇葉材質：環保防火PBT
- Bearing：※Sleeve・★WRB・◎Two Ball Bearing
  軸承：※含油・★WRB・◎滾珠軸承
- Unit Weight：50g
  風扇單體重量：60克

P&Q Curve At Rated Voltage

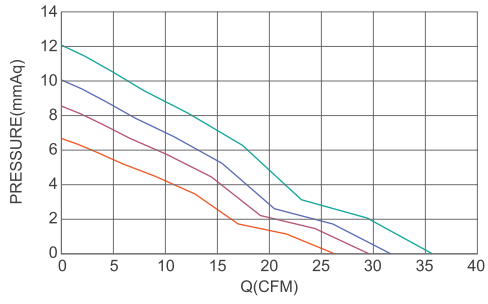

Model No.	Bearing Type	Voltage (VDC)	Current (A)	Power (W)	Speed (RPM)	Air Flow (CFM)	Air Flow (m^3/min)	Air Pressure (mmH2O)	Air Pressure (Inch H2O)	Noise (dBA)
TRS6020x05D	※◎★	5 (4.0~6.0)	0.14	1.68	3000	17.71	0.50	3.00	0.12	28.7
TRS6020x05L	※◎★	5 (4.0~6.0)	0.30	3.60	4000	23.61	0.67	5.34	0.21	33.9
TRS6020x12D	※◎★	12 (7.0~14.0)	0.06	0.72	3000	17.71	0.50	3.00	0.12	28.7
TRS6020x12L	※◎★	12 (7.0~14.0)	0.13	1.56	4000	23.61	0.67	5.34	0.21	33.9
TRS6020x12M	※◎★	12 (7.0~14.0)	0.15	1.80	4500	26.56	0.75	6.76	0.27	38.1
TRS6020x12H	※◎★	12 (7.0~14.0)	0.22	2.64	5000	29.51	0.84	8.34	0.33	41.2
TRS6020x12VH	※◎★	12 (7.0~14.0)	0.29	3.48	5500	32.46	0.92	10.09	0.40	43.7
TRS6020x24L	※◎★	24 (15.0~27.0)	0.06	0.72	4000	23.61	0.67	5.34	0.21	33.9
TRS6020x24M	※◎★	24 (15.0~27.0)	0.74	17.76	4500	26.56	0.75	6.67	0.27	38.1
TRS6020x24H	※◎★	24 (15.0~27.0)	0.11	2.64	5000	29.51	0.84	8.34	0.33	41.2
TRS6020x24VH	※◎★	24 (15.0~27.0)	0.15	3.60	5500	32.46	0.92	10.09	0.40	43.7
TRS6020x24SH	※◎★	24 (15.0~27.0)	0.21	5.04	6000	35.41	1.00	12.01	0.47	45.5

x Bearing System ※：Sleeve ★：WRB ◎：Ball

★如果您需要的轉速或電壓或功能不在這份清單上，請與我們業務聯繫 Please contact us, if the SPEC you need is not in the list.

★產品詳細數據及功能請參閱承認書 Please see the approval sheet for more information . ★產品規格變更不另行通知 Specifications are subject to change without notice.

DC Axial Fan

TRS6025 SERIES 60X60X25mm

DIMENSIONS DRAWING UNIT：mm

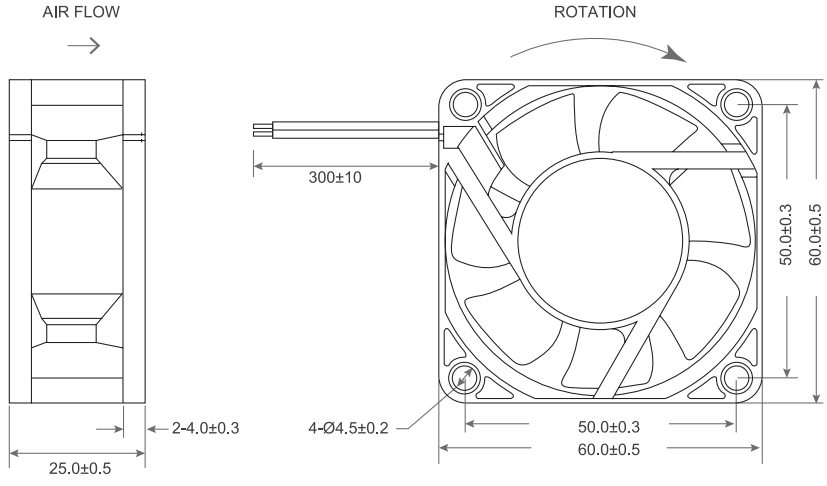

P&Q Curve At Rated Voltage

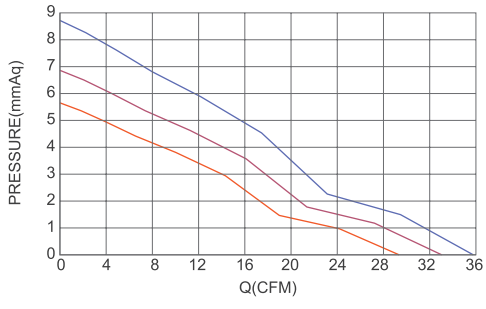

- Frame：Thermoplastic PBT UL94-V0
  外框材質：環保防火PBT
- Impeller：Thermoplastic PBT UL94-V0
  扇葉材質：環保防火PBT
- Bearing：※Sleeve・★WRB・◎Two Ball Bearing
  軸承：※含油・★WRB・◎滾珠軸承
- Unit Weight：58g
  風扇單體重量：58克

Model No.	Bearing Type	Voltage (VDC)	Current (A)	Power (W)	Speed (RPM)	Air Flow (CFM)	Air Flow (m^3/min)	Air Pressure (mmH_2O)	Air Pressure (Inch H_2O)	Noise (dBA)
TRS6025x12D	※★◎	12 (7.0~14.0)	0.08	0.96	3000	18.59	0.53	2.29	0.09	27.2
TRS6025x12L	※★◎	12 (7.0~14.0)	0.12	1.44	3600	21.59	0.61	3.09	0.10	30.5
TRS6025x12M	※★◎	12 (7.0~14.0)	0.16	1.92	4200	25.19	0.71	4.20	0.17	35.7
TRS6025x12H	※★◎	12 (7.0~14.0)	0.18	2.16	4800	29.39	0.83	5.72	0.23	39.4
TRS6025x12VH	※★◎	12 (7.0~14.0)	0.24	2.88	5400	32.39	0.92	6.94	0.27	42.0
TRS6025x12SH	※★◎	12 (7.0~14.0)	0.42	5.04	6000	35.99	1.02	8.57	0.34	44.8
TRS6025x24D	※★◎	24 (15.0~27.0)	0.04	0.96	3000	18.59	0.53	2.29	0.09	27.2
TRS6025x24L	※★◎	24 (15.0~27.0)	0.07	1.44	3600	21.59	0.61	3.09	0.10	30.5
TRS6025x24M	※★◎	24 (15.0~27.0)	0.09	1.92	4200	25.19	0.71	4.20	0.17	35.7
TRS6025x24H	※★◎	24 (15.0~27.0)	0.10	2.16	4800	29.39	0.83	5.72	0.23	39.4
TRS6025x24VH	※★◎	24 (15.0~27.0)	0.14	2.88	5400	32.39	0.92	6.94	0.27	42.0
TRS6025x24SH	※★◎	24 (15.0~27.0)	0.21	5.04	6000	35.99	1.02	8.57	0.34	44.8
TRS6025x48M	※★◎	48 (35.0~57.0)	0.05	1.92	4200	25.19	0.71	4.20	0.17	35.7
TRS6025x48H	※★◎	48 (35.0~57.0)	0.05	2.16	4800	29.39	0.83	5.72	0.23	39.4
TRS6025x48VH	※★◎	48 (35.0~57.0)	0.07	2.88	5400	32.39	0.92	6.94	0.27	42.0
TRS6025x48SH	※★◎	48 (35.0~57.0)	0.11	5.04	6000	35.99	1.02	8.57	0.34	44.8

Optional Frames：

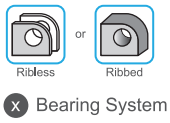

X Bearing System ※：Sleeve ★：WRB ◎：Ball

★如果您需要的轉速或電壓或功能不在這份清單上，請與我們業務聯繫 Please contact us, if the SPEC you need is not in the list.

★產品詳細數據及功能請參閱承認書 Please see the approval sheet for more information . ★產品規格變更不另行通知 Specifications are subject to change without notice.

DC Axial Fan

TRD6025 SERIES 60X60X25mm

DIMENSIONS DRAWING UNIT：mm

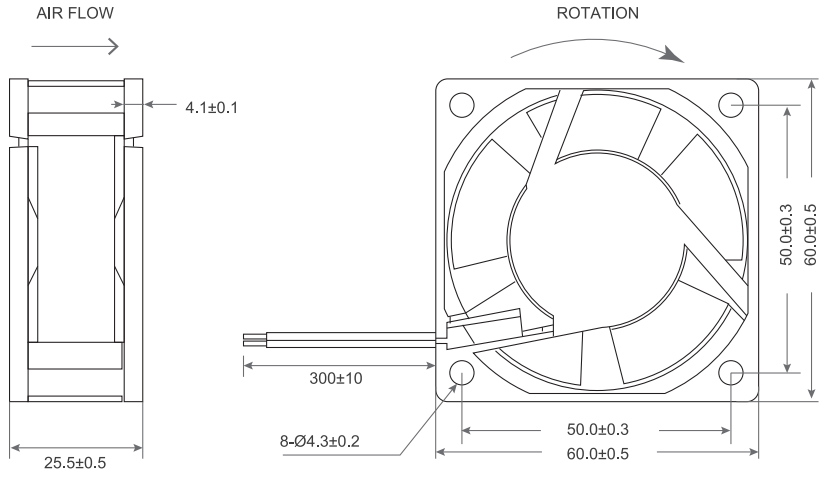

- Frame：Thermoplastic PBT UL94-V0
  外框材質：環保防火PBT
- Impeller：Thermoplastic PBT UL94-V0
  扇葉材質：環保防火PBT
- Bearing：※Sleeve・★WRB・◎Two Ball Bearing
  軸承：※含油・★WRB・◎滾珠軸承
- Unit Weight：55g
  風扇單體重量：55克

P&Q Curve At Rated Voltage

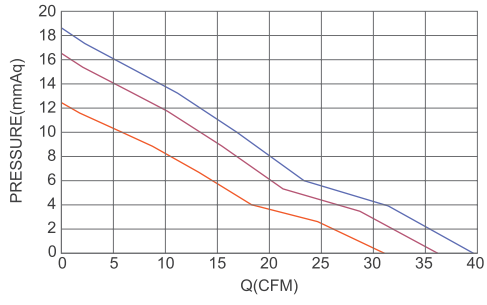

Model No.	Bearing Type	Voltage (VDC)	Current (A)	Power (W)	Speed (RPM)	Air Flow (CFM)	Air Flow (m^3/min)	Air Pressure (mmH2O)	Air Pressure (Inch H2O)	Noise (dBA)
TRD6025x12D	※★◎	12 (7.0~14.0)	0.09	1.08	3500	17.07	0.48	3.55	0.14	30.80
TRD6025x12L	※★◎	12 (7.0~14.0)	0.15	1.80	4500	26.05	0.74	6.95	0.27	32.02
TRD6025x12M	※★◎	12 (7.0~14.0)	0.21	2.52	5500	29.00	0.82	8.65	0.34	40.00
TRD6025x12H	※★◎	12 (7.0~14.0)	0.32	3.84	6500	31.70	0.90	12.26	0.48	46.30
TRD6025x12VH	※★◎	12 (7.0~14.0)	0.34	4.08	7500	36.58	1.03	16.32	0.64	49.50
TRD6025x12SH	※★◎	12 (7.0~14.0)	0.36	4.32	8000	39.02	1.10	18.57	0.73	50.90
TRD6025x24D	※★◎	24 (15.0~27.0)	0.05	1.08	3500	17.07	0.48	3.55	0.14	30.80
TRD6025x24L	※★◎	24 (15.0~27.0)	0.08	1.80	4500	26.05	0.74	6.95	0.27	32.02
TRD6025x24M	※★◎	24 (15.0~27.0)	0.11	2.52	5500	29.00	0.82	8.65	0.34	40.00
TRD6025x24H	※★◎	24 (15.0~27.0)	0.16	3.84	6500	31.70	0.90	12.26	0.48	46.30
TRD6025x24VH	※★◎	24 (15.0~27.0)	0.17	4.08	7500	36.58	1.03	16.32	0.64	49.50
TRD6025x24SH	※★◎	24 (15.0~27.0)	0.18	4.32	8000	39.02	1.10	18.57	0.73	50.90
TRD6025x48D	※★◎	48 (35.0~57.0)	0.03	1.08	3500	17.07	0.48	3.55	0.14	30.80
TRD6025x48L	※★◎	48 (35.0~57.0)	0.04	1.80	4500	26.05	0.74	6.95	0.27	32.02
TRD6025x48M	※★◎	48 (35.0~57.0)	0.06	2.52	5500	29.00	0.82	8.65	0.34	40.00
TRD6025x48H	※★◎	48 (35.0~57.0)	0.08	3.84	6500	31.70	0.90	12.26	0.48	46.30
TRD6025x48VH	※★◎	48 (35.0~57.0)	0.08	4.08	7500	36.58	1.03	16.32	0.64	49.50
TRD6025x48SH	※★◎	48 (35.0~57.0)	0.09	4.32	8000	39.02	1.10	18.57	0.73	50.90

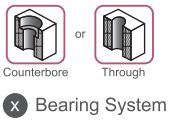

X Bearing System ※：Sleeve ★：WRB ◎：Ball

★如果您需要的轉速或電壓或功能不在這份清單上，請與我們業務聯繫 Please contact us, if the SPEC you need is not in the list.

★產品詳細數據及功能請參閱承認書 Please see the approval sheet for more information . ★產品規格變更不另行通知 Specifications are subject to change without notice.

DC Axial Fan

TRD6025 B SERIES 60X60X25mm

DIMENSIONS DRAWING UNIT：mm

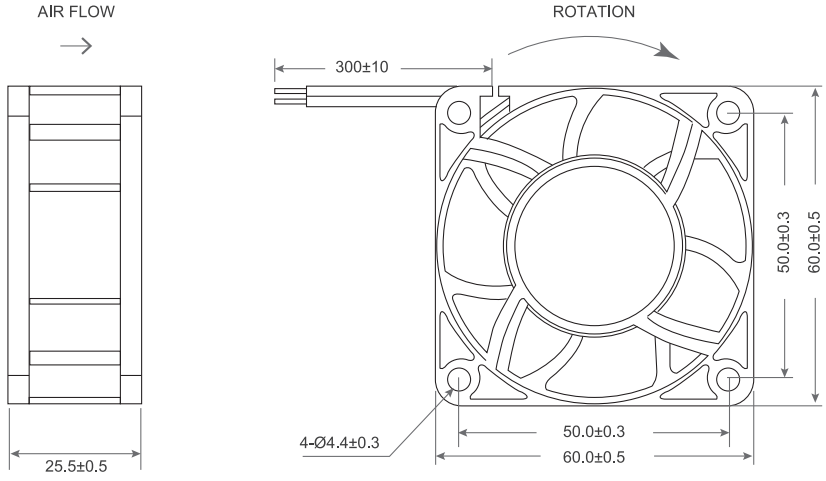

- Frame：Thermoplastic PBT UL94-V0
  外框材質：環保防火PBT
- Impeller：Thermoplastic PBT UL94-V0
  扇葉材質：環保防火PBT
- Bearing：※Sleeve・★WRB・◎Two Ball Bearing
  軸承：※含油・★WRB・◎滾珠軸承
- Unit Weight：58g
  風扇單體重量：58克

P&Q Curve At Rated Voltage

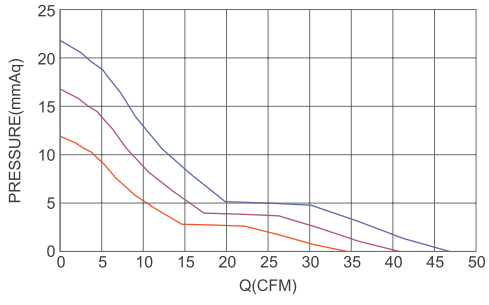

Model No.	Bearing Type	Voltage (VDC)	Current (A)	Power (W)	Speed (RPM)	Air Flow (CFM)	Air Flow (m^3/min)	Air Pressure (mmH_2O)	Air Pressure (Inch H_2O)	Noise (dBA)
TRD6025x12L	※★◎	12 (7.0~14.0)	0.08	0.95	4000	23.16	0.66	5.49	0.22	32.53
TRD6025x12M	※★◎	12 (7.0~14.0)	0.12	1.51	5000	28.94	0.82	8.58	0.34	36.27
TRD6025x12H	※★◎	12 (7.0~14.0)	0.18	2.25	6000	34.73	0.98	12.36	0.49	40.74
TRD6025x12VH	※★◎	12 (7.0~14.0)	0.27	3.28	7000	40.52	1.15	16.82	0.66	46.46
TRD6025x24L	※★◎	24 (15.0~27.0)	0.04	0.95	4000	23.18	0.66	5.49	0.22	32.53
TRD6025x24M	※★◎	24 (15.0~27.0)	0.06	1.51	5000	28.94	0.82	8.58	0.34	36.27
TRD6025x24H	※★◎	24 (15.0~27.0)	0.09	2.25	6000	34.73	0.98	12.36	0.49	40.74
TRD6025x24VH	※★◎	24 (15.0~27.0)	0.13	3.28	7000	40.52	1.15	16.82	0.66	46.46
TRD6025x24SH	※★◎	24 (15.0~27.0)	0.20	4.74	8000	46.31	1.31	21.97	0.86	50.31
TRD6025x48L	※★◎	48 (35.0~57.0)	0.02	0.95	4000	23.16	0.66	5.49	0.22	32.53
TRD6025x48M	※★◎	48 (35.0~57.0)	0.03	1.51	5000	28.94	0.82	8.58	0.34	36.27
TRD6025x48H	※★◎	48 (35.0~57.0)	0.05	2.25	6000	34.73	0.98	12.36	0.49	40.74
TRD6025x48VH	※★◎	48 (35.0~57.0)	0.07	3.28	7000	40.52	1.15	16.82	0.66	46.46
TRD6025x48SH	※★◎	48 (35.0~57.0)	0.10	4.74	8000	46.31	1.31	21.97	0.86	50.31

Optional Frames：

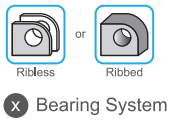

Screw Holes：

X Bearing System ※：Sleeve ★：WRB ◎：Ball

★如果您需要的轉速或電壓或功能不在這份清單上，請與我們業務聯繫 Please contact us, if the SPEC you need is not in the list.

★產品詳細數據及功能請參閱承認書 Please see the approval sheet for more information . ★產品規格變更不另行通知 Specifications are subject to change without notice.

DC Axial Fan

TRS6032 U SERIES 60X60X32mm

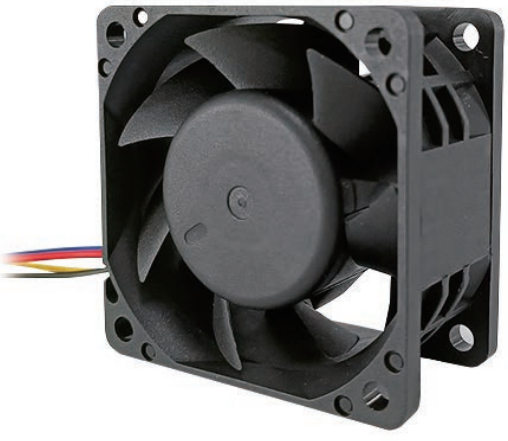

DIMENSIONS DRAWING UNIT：mm

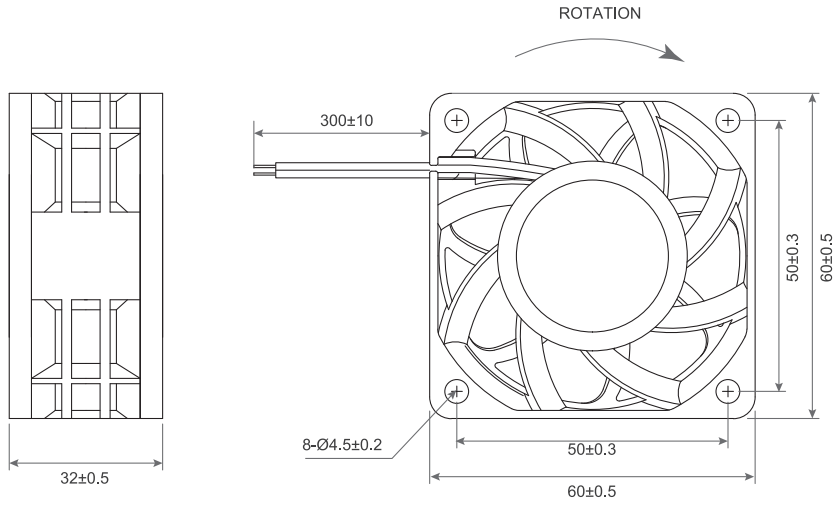

- Frame：Thermoplastic PBT UL94-V0
  外框材質：環保防火PBT
- Impeller：Thermoplastic PBT UL94-V0
  扇葉材質：環保防火PBT
- Bearing：※Sleeve・★WRB・◎Two Ball Bearing
  軸承：※含油・★WRB・◎滾珠軸承
- Unit Weight：96.5g
  風扇單體重量：96.5克

P&Q Curve At Rated Voltage

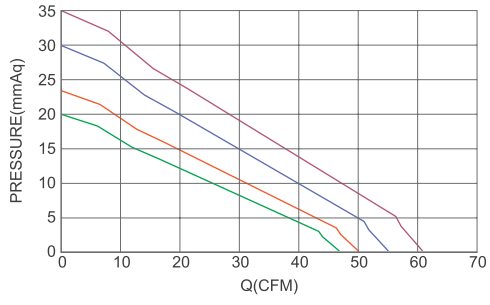

Model No.	Bearing Type	Voltage (VDC)	Current (A)	Power (W)	Speed (RPM)	Air Flow (CFM)	Air Flow (m^3/min)	Air Pressure (mmH2O)	Air Pressure (Inch H2O)	Noise (dBA)
TRS6032x12D	※★◎	12 (7.0~13.5)	0.51	6.16	7000	40.2	1.14	15.7	2.11	53.5
TRS6032x12L	※★◎	12 (7.0~13.5)	0.68	8.10	8000	45.9	1.30	20.1	2.13	54.1
TRS6032x12M	※★◎	12 (7.0~13.5)	0.94	11.28	9000	49.5	1.40	23.4	2.20	55.9
TRS6032x12H	※★◎	12 (7.0~13.5)	1.26	15.12	10000	55.2	1.56	29.3	2.47	62.6
TRS6032x12VH	※★◎	12 (7.0~13.5)	1.60	19.20	11000	60.3	1.71	35.0	2.68	68.0
TRS6032x24D	※★◎	24 (18.0~26.5)	0.26	6.16	7000	40.2	1.14	15.7	2.11	53.5
TRS6032x24L	※★◎	24 (18.0~26.5)	0.34	8.10	8000	45.9	1.30	20.1	2.13	54.1
TRS6032x24M	※★◎	24 (18.0~26.5)	0.47	11.28	9000	49.5	1.40	23.4	2.20	55.9
TRS6032x24H	※★◎	24 (18.0~26.5)	0.63	15.12	10000	55.2	1.56	29.3	2.47	62.6
TRS6032x24VH	※★◎	24 (18.0~26.5)	0.80	19.20	11000	60.3	1.71	35.0	2.68	68.0
TRS6032x48D	※★◎	48 (36.0~54.0)	0.13	6.16	7000	40.2	1.14	15.7	2.11	53.5
TRS6032x48L	※★◎	48 (36.0~54.0)	0.17	8.10	8000	45.9	1.30	20.1	2.13	54.1
TRS6032x48M	※★◎	48 (36.0~54.0)	0.24	11.28	9000	49.5	1.40	23.4	2.20	55.9
TRS6032x48H	※★◎	48 (36.0~54.0)	0.32	15.12	10000	55.2	1.56	29.3	2.47	62.6
TRS6032x48VH	※★◎	48 (36.0~54.0)	0.40	19.20	11000	60.3	1.71	35.0	2.68	68.0

(x) Bearing System ※：Sleeve ★：WRB ◎：Ball

★如果您需要的轉速或電壓或功能不在這份清單上，請與我們業務聯繫 Please contact us, if the SPEC you need is not in the list.

★產品詳細數據及功能請參閱承認書 Please see the approval sheet for more information . ★產品規格變更不另行通知 Specifications are subject to change without notice.

DC Axial Fan

TRD6038 SERIES 60X60X38mm

DIMENSIONS DRAWING UNIT：mm

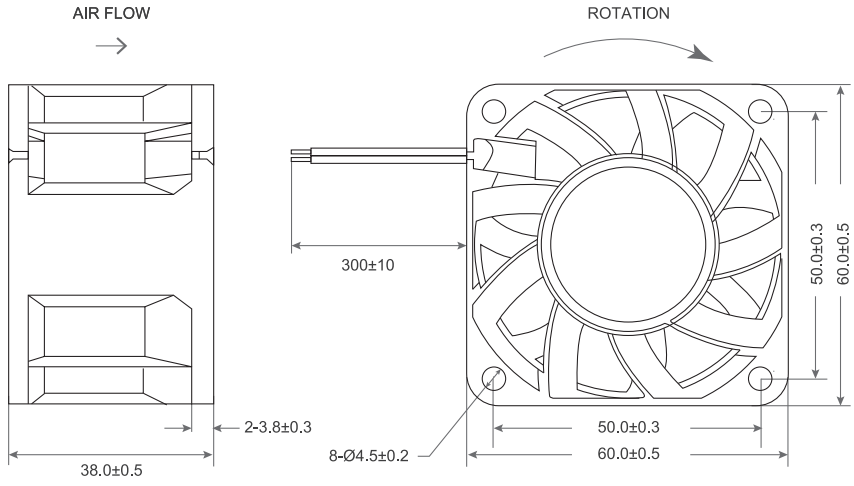

- Frame：Thermoplastic PBT UL94-V0
  外框材質：環保防火PBT
- Impeller：Thermoplastic PBT UL94-V0
  扇葉材質：環保防火PBT
- Bearing：※Sleeve・★WRB・◎Two Ball Bearing
  軸承：※含油・★WRB・◎滾珠軸承
- Unit Weight：106g
  風扇單體重量：106克

P&Q Curve At Rated Voltage

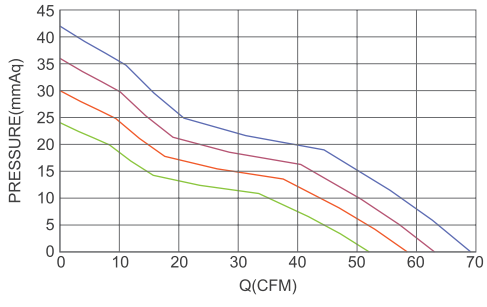

Model No.	Bearing Type	Voltage (VDC)	Current (A)	Power (W)	Speed (RPM)	Air Flow (CFM)	Air Flow (m^3/min)	Air Pressure (mmH_2O)	Air Pressure (Inch H_2O)	Noise (dBA)
TRD6038x12D	※★◎	12 (7.0~14.0)	0.34	4.08	7000	39.82	1.13	14.43	0.57	53.8
TRD6038x12L	※★◎	12 (7.0~14.0)	0.46	5.52	8000	45.41	1.29	18.85	0.74	55.0
TRD6038x12M	※★◎	12 (7.0~14.0)	0.67	8.04	9000	51.80	1.47	24.40	0.96	58.5
TRD6038x12H	※★◎	12 (7.0~14.0)	0.96	11.52	10000	57.50	1.63	30.00	1.18	61.0
TRD6038x12VH	※★◎	12 (7.0~14.0)	1.32	15.84	11000	62.57	1.77	35.63	1.40	63.8
TRD6038x12SH	※★◎	12 (7.0~14.0)	1.60	19.20	12000	68.26	1.93	42.41	1.67	68.2
TRD6038x24D	※★◎	24 (15.0~27.0)	0.16	3.84	7000	39.82	1.13	14.43	0.57	53.8
TRD6038x24L	※★◎	24 (15.0~27.0)	0.17	4.08	8000	45.41	1.29	18.85	0.74	55.0
TRD6038x24M	※★◎	24 (15.0~27.0)	0.23	5.52	9000	51.80	1.47	24.40	0.96	58.5
TRD6038x24H	※★◎	24 (15.0~27.0)	0.31	7.44	10000	57.50	1.63	30.00	1.18	61.0
TRD6038x24VH	※★◎	24 (15.0~27.0)	0.41	9.84	11000	62.57	1.77	35.63	1.40	63.8
TRD6038x24SH	※★◎	24 (15.0~27.0)	0.53	12.72	12000	68.26	1.93	42.41	1.67	68.2

(x) Bearing System ※：Sleeve ★：WRB ◎：Ball

★如果您需要的轉速或電壓或功能不在這份清單上，請與我們業務聯繫 Please contact us, if the SPEC you need is not in the list.

★產品詳細數據及功能請參閱承認書 Please see the approval sheet for more information . ★產品規格變更不另行通知 Specifications are subject to change without notice.

DC Axial Fan

TRD6038 U SERIES 60X60X38mm

DIMENSIONS DRAWING UNIT：mm

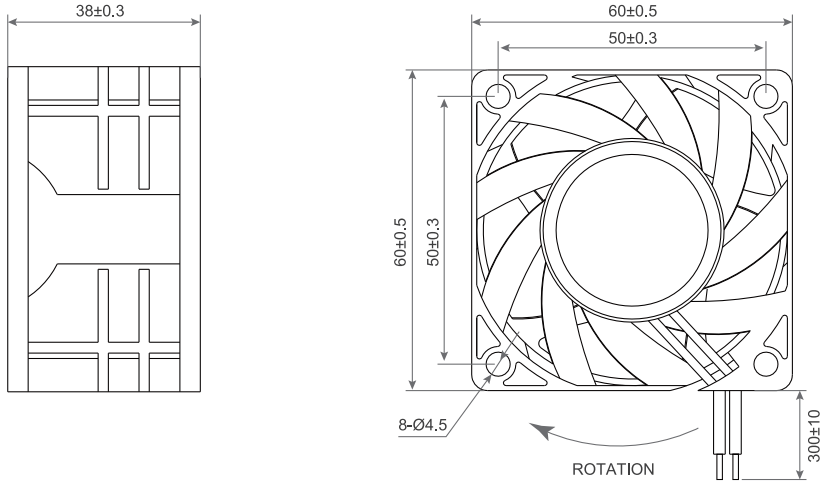

- Frame：Thermoplastic PBT UL94-V0
  外框材質：環保防火PBT
- Impeller：Thermoplastic PBT UL94-V0
  扇葉材質：環保防火PBT
- Bearing：◎Two Ball Bearing
  軸承：◎滾珠軸承
- Unit Weight：86g
  風扇單體重量：86克

P&Q Curve At Rated Voltage

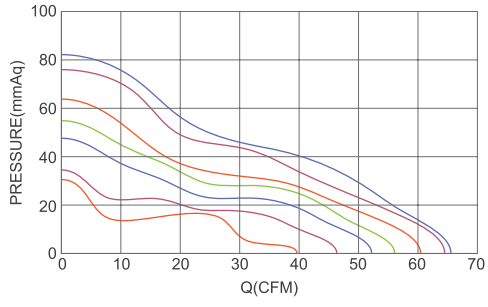

Model No.	Bearing Type	Voltage (VDC)	Current (A)	Power (W)	Speed (RPM)	Air Flow (CFM)	Air Flow (m^3/min)	Air Pressure (mmH2O)	Air Pressure (Inch H2O)	Noise (dBA)
TRD6038B12D	◎	12 (8.5~13.5)	0.60	7.2	10000	39.50	1.118	29.29	1.153	55.9
TRD6038B12L	◎	12 (8.5~13.5)	0.70	8.4	11000	46.19	1.307	31.10	1.224	57.6
TRD6038B12M	◎	12 (8.5~13.5)	0.90	10.8	12000	52.04	1.473	48.51	1.910	61.8
TRD6038B12H	◎	12 (8.5~13.5)	1.00	12.0	13000	55.89	1.582	55.90	2.201	63.7
TRD6038B12VH	◎	12 (8.5~13.5)	1.20	14.4	14000	60.25	1.705	64.98	2.558	64.7
TRD6038B12SH	◎	12 (8.5~13.5)	1.30	15.6	15000	64.29	1.819	77.37	3.046	68.8
TRD6038B12UH	◎	12 (8.5~13.5)	1.40	16.8	16000	65.34	1.849	83.69	3.295	70.8
TRD6038B24D	◎	24 (18.0~26.5)	0.30	7.2	10000	39.50	1.118	29.29	1.153	55.9
TRD6038B24L	◎	24 (18.0~26.5)	0.35	8.4	11000	46.19	1.307	31.10	1.224	57.6
TRD6038B24M	◎	24 (18.0~26.5)	0.45	10.8	12000	52.04	1.473	48.51	1.910	61.8
TRD6038B24H	◎	24 (18.0~26.5)	0.50	12.0	13000	55.89	1.582	55.90	2.201	63.7
TRD6038B24VH	◎	24 (18.0~26.5)	0.60	14.4	14000	60.25	1.705	64.98	2.558	64.7
TRD6038B24SH	◎	24 (18.0~26.5)	0.65	15.6	15000	64.29	1.819	77.37	3.046	68.8
TRD6038B24UH	◎	24 (18.0~26.5)	0.70	16.8	16000	65.34	1.849	83.69	3.295	70.8
TRD6038B48D	◎	48 (36.0~54.0)	0.15	7.2	10000	39.50	1.118	29.29	1.153	55.9
TRD6038B48L	◎	48 (36.0~54.0)	0.18	8.4	11000	46.19	1.307	31.10	1.224	57.6
TRD6038B48M	◎	48 (36.0~54.0)	0.23	10.8	12000	52.04	1.473	48.51	1.910	61.8
TRD6038B48H	◎	48 (36.0~54.0)	0.25	12.0	13000	55.89	1.582	55.90	2.201	63.7
TRD6038B48VH	◎	48 (36.0~54.0)	0.30	14.4	14000	60.25	1.705	64.98	2.558	64.7
TRD6038B48SH	◎	48 (36.0~54.0)	0.33	15.6	15000	64.29	1.819	77.37	3.046	68.8
TRD6038B48UH	◎	48 (36.0~54.0)	0.35	16.8	16000	65.34	1.849	83.69	3.295	70.8

X Bearing System ※：Sleeve ★：WRB ◎：Ball

★如果您需要的轉速或電壓或功能不在這份清單上，請與我們業務聯繫 Please contact us, if the SPEC you need is not in the list.

★產品詳細數據及功能請參閱承認書 Please see the approval sheet for more information . ★產品規格變更不另行通知 Specifications are subject to change without notice.

DC Axial Fan

TRD6038 UB SERIES 60X60X38mm

DIMENSIONS DRAWING UNIT：mm

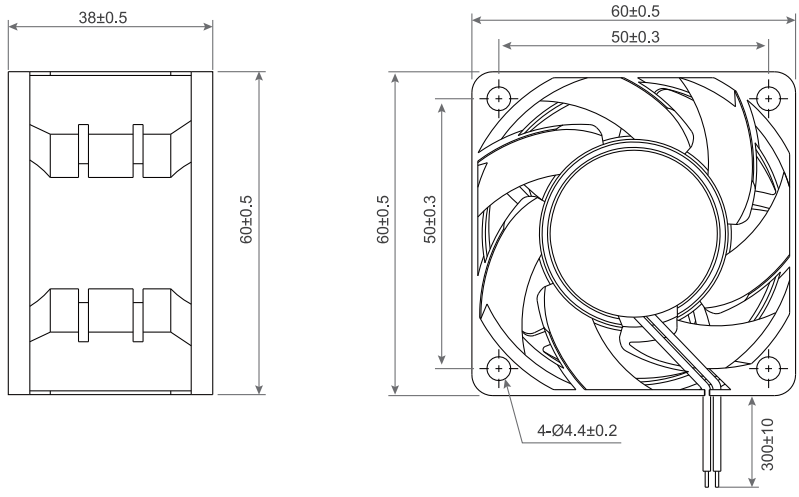

- Frame：Thermoplastic PBT UL94-V0
  外框材質：環保防火PBT
- Impeller：Thermoplastic PBT UL94-V0
  扇葉材質：環保防火PBT
- Bearing：◎Two Ball Bearing
  軸承：◎滾珠軸承
- Unit Weight：130g
  風扇單體重量：130克

P&Q Curve At Rated Voltage

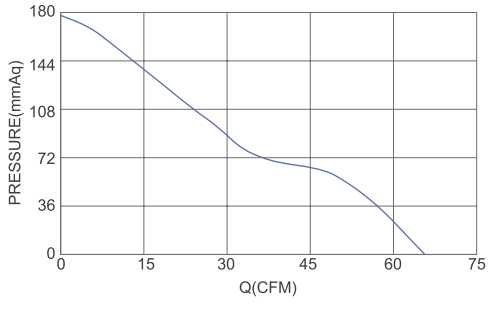

Model No.	Bearing Type	Voltage (VDC)	Current (A)	Power (W)	Speed (RPM)	Air Flow (CFM)	Air Flow (m^3/min)	Air Pressure (mmH_2O)	Air Pressure (Inch H_2O)	Noise (dBA)
TRD6038B12H	◎	12 (7.5~13.5)	2.70	32.4	21700	66.4	1.88	177.8	7.0	68.0
TRD6038B24H	◎	24 (18.0~26.5)	1.35	32.4	21700	66.4	1.88	177.8	7.0	68.0
TRD6038B48H	◎	48 (36.0~54.0)	0.68	32.4	21700	66.4	1.88	177.8	7.0	68.0

X Bearing System ※：Sleeve ★：WRB ◎：Ball

★如果您需要的轉速或電壓或功能不在這份清單上，請與我們業務聯繫 Please contact us, if the SPEC you need is not in the list.

★產品詳細數據及功能請參閱承認書 Please see the approval sheet for more information . ★產品規格變更不另行通知 Specifications are subject to change without notice.

DC Axial Fan

TRS7010 SERIES 70X70X10mm

DIMENSIONS DRAWING UNIT：mm

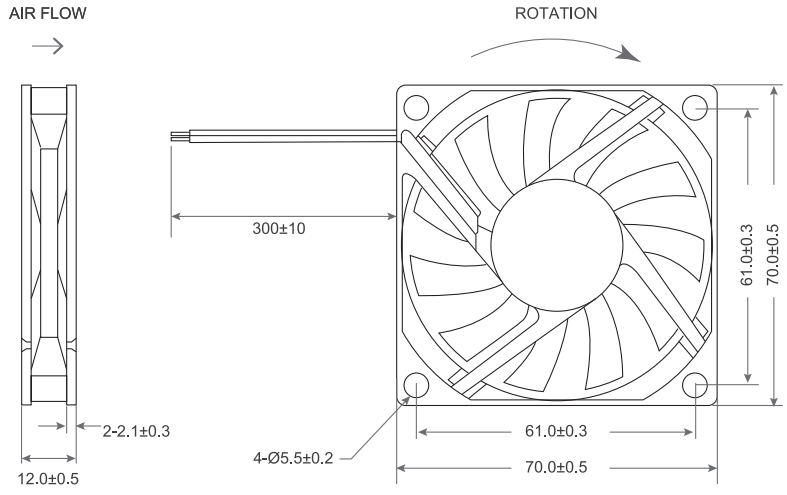

- Frame：Thermoplastic PBT UL94-V0
  外框材質：環保防火PBT
- Impeller：Thermoplastic PBT UL94-V0
  扇葉材質：環保防火PBT
- Bearing：※Sleeve・★WRB・◎Two Ball Bearing
  軸承：※含油・★WRB・◎滾珠軸承
- Unit Weight：42g
  風扇單體重量：42克

P&Q Curve At Rated Voltage

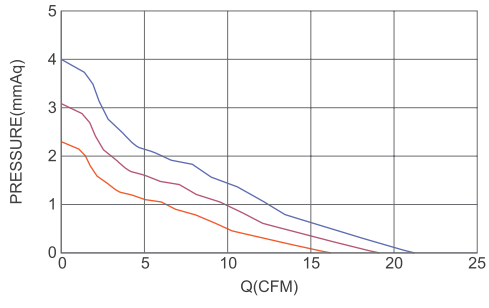

Model No.	Bearing Type	Voltage (VDC)	Current (A)	Power (W)	Speed (RPM)	Air Flow (CFM)	Air Flow (m^3/min)	Air Pressure (mmH_2O)	Air Pressure (Inch H_2O)	Noise (dBA)
TRS7010x05D	※★◎	5 (4.0~6.0)	0.15	0.75	2500	13.42	0.38	1.56	0.06	24.4
TRS7010x05L	※★◎	5 (4.0~6.0)	0.24	1.20	3000	16.11	0.46	2.24	0.09	29.9
TRS7010x12D	※★◎	12 (7.0~14.0)	0.06	0.72	2500	13.42	0.38	1.56	0.06	24.4
TRS7010x12L	※★◎	12 (7.0~14.0)	0.10	1.20	3000	16.11	0.46	2.24	0.09	29.9
TRS7010x12M	※★◎	12 (7.0~14.0)	0.16	1.92	3500	18.79	0.53	3.05	0.12	33.0
TRS7010x12H	※★◎	12 (7.0~14.0)	0.24	2.88	4000	21.48	0.61	3.99	0.16	36.2
TRS7010x24M	※★◎	24 (15.0~27.0)	0.05	1.20	3000	16.11	0.46	2.24	0.09	29.9
TRS7010x24H	※★◎	24 (15.0~27.0)	0.08	1.92	3500	18.79	0.53	3.05	0.12	33.0
TRS7010x24VH	※★◎	24 (15.0~27.0)	0.14	3.36	4000	21.48	0.61	3.99	0.16	36.2

x Bearing System ※：Sleeve ★：WRB ◎：Ball

★如果您需要的轉速或電壓或功能不在這份清單上，請與我們業務聯繫 Please contact us, if the SPEC you need is not in the list.

★產品詳細數據及功能請參閱承認書 Please see the approval sheet for more information . ★產品規格變更不另行通知 Specifications are subject to change without notice.

DC Axial Fan

TRS7015 SERIES 70X70X15mm

DIMENSIONS DRAWING UNIT：mm

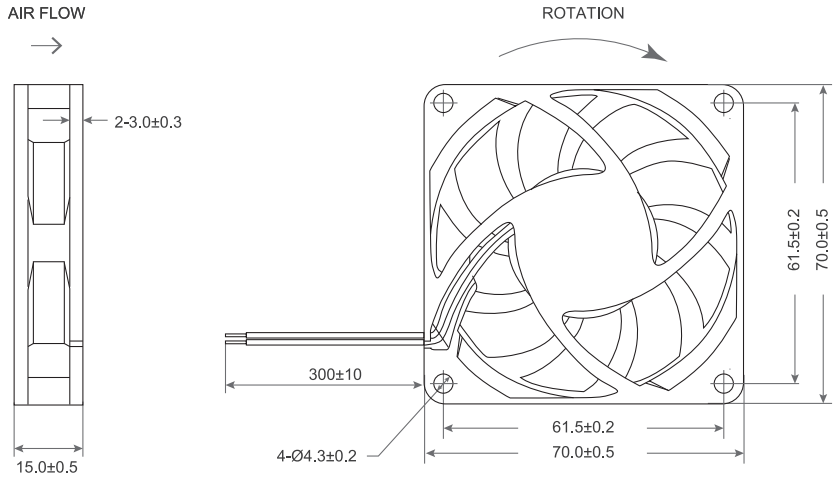

- Frame：Thermoplastic PBT UL94-V0
  外框材質：環保防火PBT
- Impeller：Thermoplastic PBT UL94-V0
  扇葉材質：環保防火PBT
- Bearing：※Sleeve・★WRB・◎Two Ball Bearing
  軸承：※含油・★WRB・◎滾珠軸承
- Unit Weight：42g
  風扇單體重量：42克

P&Q Curve At Rated Voltage

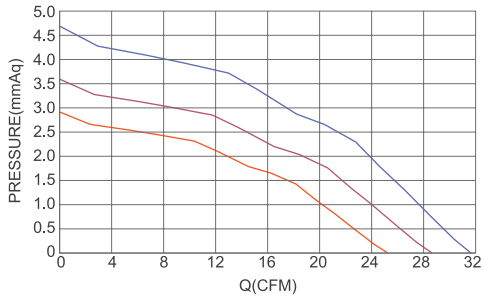

Model No.	Bearing Type	Voltage (VDC)	Current (A)	Power (W)	Speed (RPM)	Air Flow (CFM)	Air Flow (m^3/min)	Air Pressure (mmH_2O)	Air Pressure (Inch H_2O)	Noise (dBA)
TRS7015x05D	※★◎	5 (4.0~6.0)	0.19	1.10	2500	17.90	0.58	1.50	0.06	28.6
TRS7015x05L	※★◎	5 (4.0~6.0)	0.28	1.40	3000	21.40	0.68	2.20	0.09	30.4
TRS7015x05M	※★◎	5 (4.0~6.0)	0.46	2.30	3500	24.90	0.78	2.90	0.11	32.0
TRS7015x12D	※★◎	12 (7.0~14.0)	0.09	1.08	2500	17.90	0.58	1.50	0.11	28.6
TRS7015x12L	※★◎	12 (7.0~14.0)	0.12	1.44	3000	21.40	0.61	2.20	0.15	30.4
TRS7015x12M	※★◎	12 (7.0~14.0)	0.20	2.40	3500	24.90	0.70	2.90	0.19	32.0
TRS7015x12H	※★◎	12 (7.0~14.0)	0.24	2.88	4000	28.30	0.80	3.61	0.15	35.6
TRS7015x12VH	※★◎	12 (7.0~14.0)	0.26	3.12	4500	31.80	0.90	4.57	0.18	38.3
TRS7015x24L	※★◎	24 (15.0~27.0)	0.06	1.44	3000	21.40	0.61	2.20	0.09	30.4
TRS7015x24M	※★◎	24 (15.0~27.0)	0.10	2.40	3500	24.90	0.70	2.90	0.11	32.0
TRS7015x24H	※★◎	24 (15.0~27.0)	0.12	2.88	4000	28.30	0.80	3.87	0.15	35.6
TRS7015x24VH	※★◎	24 (15.0~27.0)	0.13	3.12	4500	31.80	0.90	4.80	0.19	38.3

(x) Bearing System ※：Sleeve ★：WRB ◎：Ball

★如果您需要的轉速或電壓或功能不在這份清單上，請與我們業務聯繫 Please contact us, if the SPEC you need is not in the list.

★產品詳細數據及功能請參閱承認書 Please see the approval sheet for more information . ★產品規格變更不另行通知 Specifications are subject to change without notice.

DC Axial Fan

TRS7020 U SERIES 70X70X20mm

DIMENSIONS DRAWING UNIT：mm

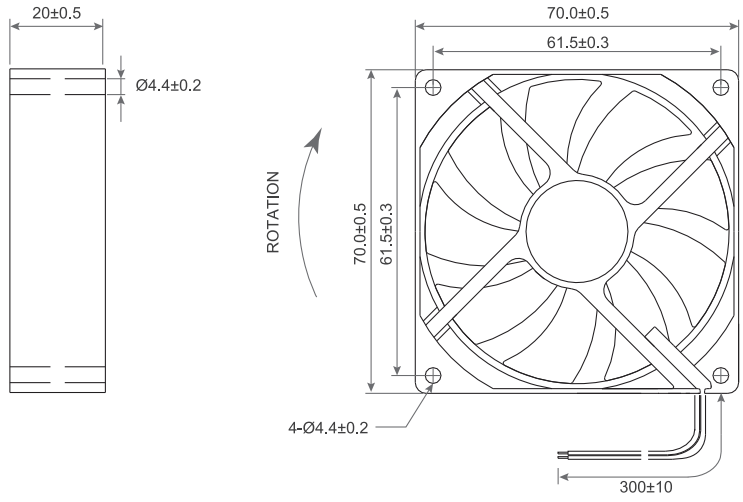

- Frame：Thermoplastic PBT UL94-V0
  外框材質：環保防火PBT
- Impeller：Thermoplastic PBT UL94-V0
  扇葉材質：環保防火PBT
- Bearing：※Sleeve・★WRB・◎Two Ball Bearing
  軸承：※含油・★WRB・◎滾珠軸承
- Unit Weight：60g
  風扇單體重量：60克

P&Q Curve At Rated Voltage

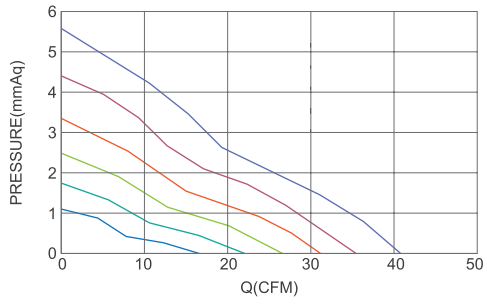

Model No.	Bearing Type	Voltage (VDC)	Current (A)	Power (W)	Speed (RPM)	Air Flow (CFM)	Air Flow (m^3/min)	Air Pressure (mmH2O)	Air Pressure (Inch H2O)	Noise (dBA)
TRS7020x12D	※◎★	12 (7.0~13.5)	0.10	1.20	2000	16.6	0.47	1.07	0.04	24.2
TRS7020x12L	※◎★	12 (7.0~13.5)	0.18	2.16	2500	21.8	0.62	1.78	0.07	25.8
TRS7020x12M	※◎★	12 (7.0~13.5)	0.27	3.24	3000	26.0	0.74	2.44	0.01	30.4
TRS7020x12H	※◎★	12 (7.0~13.5)	0.35	4.20	3500	31.1	0.88	3.33	0.13	34.6
TRS7020x12VH	※◎★	12 (7.0~13.5)	0.42	5.04	4000	35.3	1.00	4.41	0.17	38.3
TRS7020x12SH	※◎★	12 (7.0~13.5)	0.48	5.76	4500	40.4	1.14	5.69	0.22	42.2
TRS7020x24D	※◎★	24 (18.0~26.5)	0.05	1.20	2000	16.6	0.47	1.07	0.04	24.2
TRS7020x24L	※◎★	24 (18.0~26.5)	0.09	2.16	2500	21.8	0.62	1.78	0.07	25.8
TRS7020x24M	※◎★	24 (18.0~26.5)	0.14	3.24	3000	26.0	0.74	2.44	0.01	30.4
TRS7020x24H	※◎★	24 (18.0~26.5)	0.18	4.20	3500	31.1	0.88	3.33	0.13	34.6
TRS7020x24VH	※◎★	24 (18.0~26.5)	0.21	5.04	4000	35.3	1.00	4.41	0.17	38.3
TRS7020x24SH	※◎★	24 (18.0~26.5)	0.24	5.76	4500	40.4	1.14	5.69	0.22	42.2

X Bearing System ※：Sleeve ★：WRB ◎：Ball

★如果您需要的轉速或電壓或功能不在這份清單上，請與我們業務聯繫 Please contact us, if the SPEC you need is not in the list.

★產品詳細數據及功能請參閱承認書 Please see the approval sheet for more information . ★產品規格變更不另行通知 Specifications are subject to change without notice.

DC Axial Fan

TRS7025 SERIES 70X70X25mm

DIMENSIONS DRAWING UNIT：mm

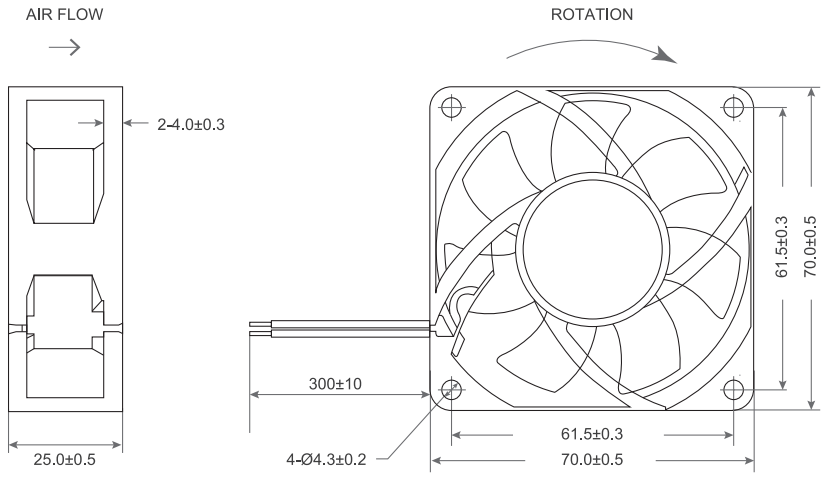

- Frame：Thermoplastic PBT UL94-V0
  外框材質：環保防火PBT
- Impeller：Thermoplastic PBT UL94-V0
  扇葉材質：環保防火PBT
- Bearing：※Sleeve・★WRB・◎Two Ball Bearing
  軸承：※含油・★WRB・◎滾珠軸承
- Unit Weight：78g
  風扇單體重量：78克

P&Q Curve At Rated Voltage

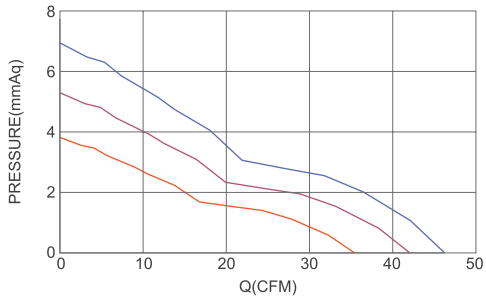

Model No.	Bearing Type	Voltage (VDC)	Current (A)	Power (W)	Speed (RPM)	Air Flow (CFM)	Air Flow (m^3/min)	Air Pressure (mmH_2O)	Air Pressure (Inch H_2O)	Noise (dBA)
TRS7025x12D	※★◎	12 (7.0~14.0)	0.10	1.20	2500	26.00	0.74	2.10	0.08	27.4
TRS7025x12L	※★◎	12 (7.0~14.0)	0.28	3.36	3500	36.00	1.02	4.10	0.16	35.5
TRS7025x12M	※★◎	12 (7.0~14.0)	0.31	3.72	4000	41.00	1.16	5.30	0.21	39.0
TRS7025x12H	※★◎	12 (7.0~14.0)	0.36	4.32	4500	44.98	1.27	6.44	0.25	41.6
TRS7025x24L	※★◎	24 (15.0~27.0)	0.14	3.36	3500	34.99	0.99	3.89	0.15	35.5
TRS7025x24M	※★◎	24 (15.0~27.0)	0.16	3.84	4000	41.00	1.16	5.30	0.21	39.0
TRS7025x24H	※★◎	24 (15.0~27.0)	0.18	4.32	4500	46.00	1.30	6.70	0.26	41.6
TRS7025x24VH	※★◎	24 (15.0~27.0)	0.20	4.80	5000	51.00	1.44	8.30	0.33	44.6

(x) Bearing System ※：Sleeve ★：WRB ◎：Ball

★如果您需要的轉速或電壓或功能不在這份清單上，請與我們業務聯繫 Please contact us, if the SPEC you need is not in the list.

★產品詳細數據及功能請參閱承認書 Please see the approval sheet for more information . ★產品規格變更不另行通知 Specifications are subject to change without notice.

DC Axial Fan

SRL7025 SERIES 70X70X25mm

DIMENSIONS DRAWING UNIT：mm

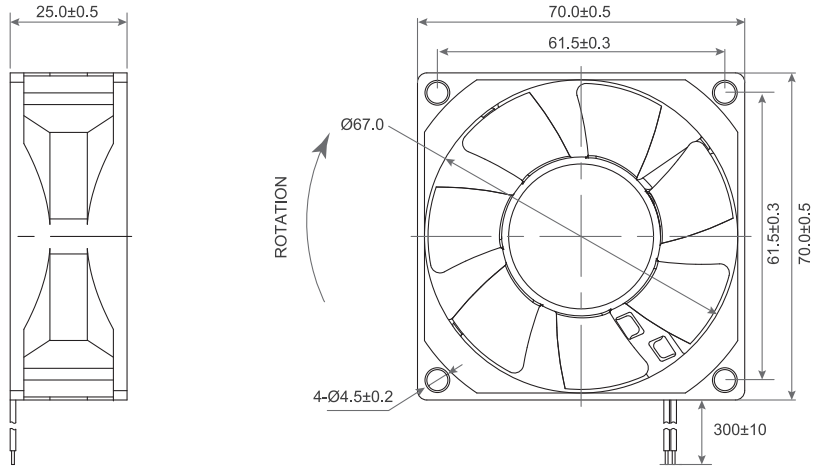

- Frame：Thermoplastic PBT UL94-V0
  外框材質：環保防火PBT
- Impeller：Thermoplastic PBT UL94-V0
  扇葉材質：環保防火PBT
- Bearing：※Sleeve・★WRB・◎Two Ball Bearing
  軸承：※含油・★WRB・◎滾珠軸承
- Unit Weight：69g
  風扇單體重量：69克

P&Q Curve At Rated Voltage

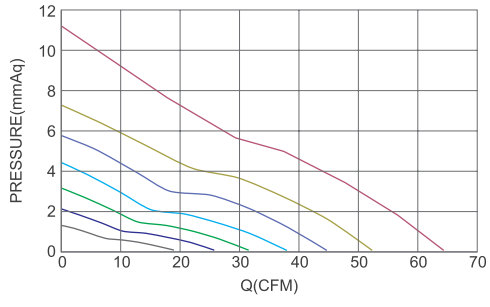

Model No.	Bearing Type	Voltage (VDC)	Current (A)	Power (W)	Speed (RPM)	Air Flow (CFM)	Air Flow (m^3/min)	Air Pressure (mmH2O)	Air Pressure (Inch H2O)	Noise (dBA)
SRLx0702512LL	※★◎	12 (6.0~13.8)	0.08	0.96	1900	18.89	0.53	1.27	0.05	13.6
SRLx0702512L	※★◎	12 (6.0~13.8)	0.12	1.44	3000	31.50	0.89	3.07	0.12	26.6
SRLx0702512M	※★◎	12 (6.0~13.8)	0.17	2.04	3600	37.92	1.07	4.36	0.17	30.2
SRLx0702512H	※★◎	12 (6.0~13.8)	0.23	2.76	4200	44.64	1.26	5.69	0.22	35.4
SRLx0702512HH	※★◎	12 (6.0~13.8)	0.33	3.96	5000	52.17	1.48	7.22	0.28	40.6
SRLx0702512EH	※★◎	12 (6.0~13.8)	0.70	8.40	6500	64.27	1.82	11.11	0.44	46.5
SRLx0702512LLP	※★◎	12 (10.0~13.8)	0.15	1.80	2500	25.90	0.73	2.05	0.08	22.9
SRLx0702512LP	※★◎	12 (10.0~13.8)	0.15	1.80	3000	31.50	0.89	3.07	0.12	26.6
SRLx0702512MP	※★◎	12 (10.0~13.8)	0.20	2.40	3600	37.92	1.07	4.36	0.17	30.2
SRLx0702512HP	※★◎	12 (10.0~13.8)	0.30	3.60	4200	44.64	1.26	5.69	0.22	35.4
SRLx0702524L	※★◎	24 (12.0~26.0)	0.10	2.40	3000	31.50	0.89	3.07	0.12	26.6
SRLx0702524M	※★◎	24 (12.0~26.0)	0.10	2.40	3600	37.92	1.07	4.36	0.17	30.2
SRLx0702524H	※★◎	24 (12.0~26.0)	0.15	3.60	4200	44.64	1.26	5.69	0.22	35.4

X Bearing System ※：Sleeve ★：WRB ◎：Ball

★如果您需要的轉速或電壓或功能不在這份清單上，請與我們業務聯繫 Please contact us, if the SPEC you need is not in the list.

★產品詳細數據及功能請參閱承認書 Please see the approval sheet for more information . ★產品規格變更不另行通知 Specifications are subject to change without notice.

DC Axial Fan

TRS7520 SERIES 75X53.8X21mm

DIMENSIONS DRAWING UNIT：mm

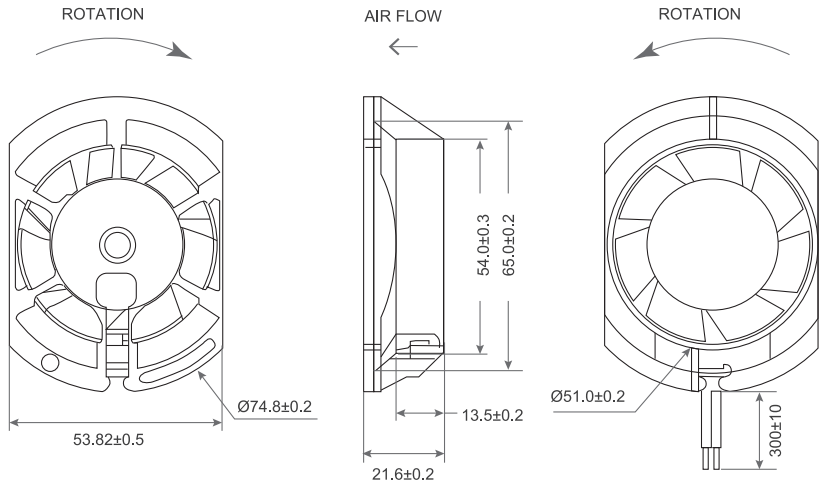

- Frame：Thermoplastic PBT UL94-V0
  外框材質：環保防火PBT
- Impeller：Thermoplastic PBT UL94-V0
  扇葉材質：環保防火PBT
- Bearing：※Sleeve・★WRB・◎Two Ball Bearing
  軸承：※含油・★WRB・◎滾珠軸承
- Unit Weight：95g
  風扇單體重量：95克

P&Q Curve At Rated Voltage

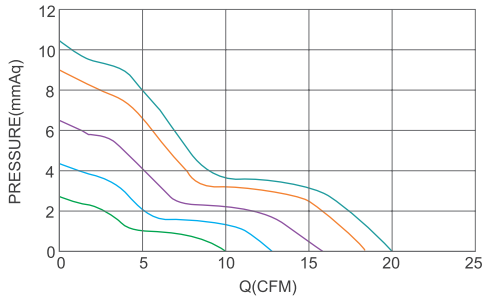

Model No.	Bearing Type	Voltage (VDC)	Current (A)	Power (W)	Speed (RPM)	Air Flow (CFM)	Air Flow (m^3/min)	Air Pressure (mmH_2O)	Air Pressure (Inch H_2O)	Noise (dBA)
TRS7520x05D	※★◎	5 (4.0~6.0)	0.14	0.70	3500	9.89	0.28	2.61	0.10	28.4
TRS7520x05L	※★◎	5 (4.0~6.0)	0.22	1.10	4500	12.83	0.36	4.32	0.17	32.5
TRS7520x05M	※★◎	5 (4.0~6.0)	0.33	1.65	5500	15.69	0.44	6.46	0.25	37.0
TRS7520x12D	※★◎	12 (7.0~14.0)	0.06	0.72	3500	9.89	0.28	2.61	0.10	28.4
TRS7520x12L	※★◎	12 (7.0~14.0)	0.10	1.14	4500	12.83	0.36	4.32	0.17	32.5
TRS7520x12M	※★◎	12 (7.0~14.0)	0.14	1.68	5500	15.69	0.44	6.46	0.25	37.5
TRS7520x12H	※★◎	12 (7.0~14.0)	0.21	2.52	6500	18.54	0.52	9.02	0.36	39.2
TRS7520x12VH	※★◎	12 (7.0~14.0)	0.25	3.00	7000	19.96	0.56	10.46	0.41	42.0
TRS7520x24D	※★◎	24 (15.0~27.0)	0.03	0.72	3500	9.89	0.28	2.61	0.10	28.4
TRS7520x24L	※★◎	24 (15.0~27.0)	0.05	1.20	4500	12.83	0.36	4.32	0.17	32.5
TRS7520x24M	※★◎	24 (15.0~27.0)	0.07	1.68	5500	15.69	0.44	6.46	0.25	37.5
TRS7520x24H	※★◎	24 (15.0~27.0)	0.11	2.64	6500	18.54	0.52	9.02	0.36	39.2
TRS7520x24VH	※★◎	24 (15.0~27.0)	0.13	3.12	7000	19.96	0.56	10.46	0.41	42.0

(x) Bearing System ※：Sleeve ★：WRB ◎：Ball

★如果您需要的轉速或電壓或功能不在這份清單上，請與我們業務聯繫 Please contact us, if the SPEC you need is not in the list.

★產品詳細數據及功能請參閱承認書 Please see the approval sheet for more information . ★產品規格變更不另行通知 Specifications are subject to change without notice.

DC Axial Fan

TRS8010 SERIES 80X80X10mm

DIMENSIONS DRAWING UNIT：mm

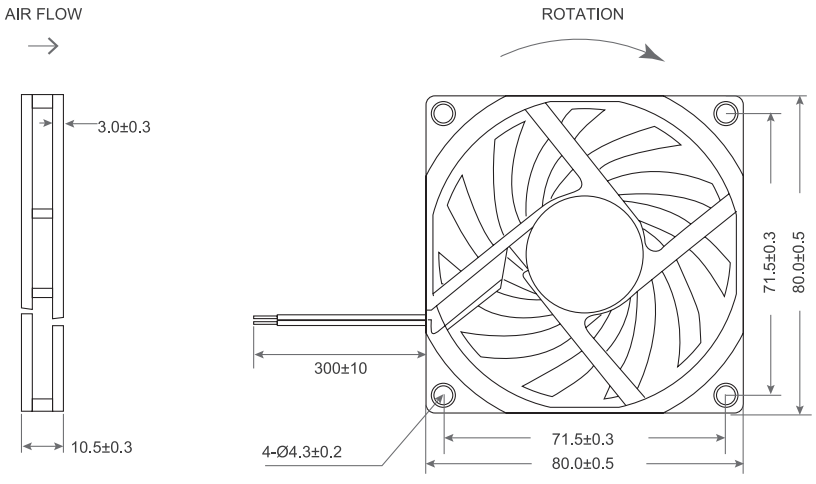

- Frame：Thermoplastic PBT UL94-V0
  外框材質：環保防火PBT
- Impeller：Thermoplastic PBT UL94-V0
  扇葉材質：環保防火PBT
- Bearing：※Sleeve・★WRB・◎Two Ball Bearing
  軸承：※含油・★WRB・◎滾珠軸承
- Unit Weight：48g
  風扇單體重量：48克

P&Q Curve At Rated Voltage

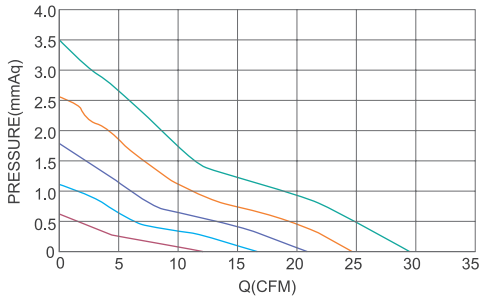

Model No.	Bearing Type	Voltage (VDC)	Current (A)	Power (W)	Speed (RPM)	Air Flow (CFM)	Air Flow (m^3/min)	Air Pressure (mmH2O)	Air Pressure (Inch H2O)	Noise (dBA)
TRS8010x05D	※★◎	5 (4.0~6.0)	0.08	0.38	1500	12.55	0.36	0.65	0.03	20.0
TRS8010x05L	※★◎	5 (4.0~6.0)	0.11	0.55	2000	16.73	0.47	1.15	0.05	22.6
TRS8010x05M	※★◎	5 (4.0~6.0)	0.21	1.05	2500	20.91	0.59	1.79	0.07	26.6
TRS8010x12D	※★◎	12 (7.0~14.0)	0.03	0.36	1500	12.55	0.36	0.65	0.03	20.0
TRS8010x12L	※★◎	12 (7.0~14.0)	0.05	0.54	2000	16.73	0.47	1.15	0.05	22.6
TRS8010x12M	※★◎	12 (7.0~14.0)	0.09	1.02	2500	20.91	0.59	1.79	0.07	26.6
TRS8010x12H	※★◎	12 (7.0~14.0)	0.15	1.80	3000	25.10	0.71	2.58	0.10	31.3
TRS8010x12VH	※★◎	12 (7.0~14.0)	0.19	2.28	3500	29.28	0.83	3.52	0.14	34.6
TRS8010x24M	※★◎	24 (15.0~27.0)	0.05	1.20	2500	20.91	0.59	1.79	0.07	26.6
TRS8010x24H	※★◎	24 (15.0~27.0)	0.08	1.92	3000	25.10	0.71	2.58	0.10	31.3
TRS8010x24VH	※★◎	24 (15.0~27.0)	0.10	2.40	3500	29.28	0.83	3.52	0.14	34.6

X Bearing System ※：Sleeve ★：WRB ◎：Ball

★如果您需要的轉速或電壓或功能不在這份清單上，請與我們業務聯繫 Please contact us, if the SPEC you need is not in the list.

★產品詳細數據及功能請參閱承認書 Please see the approval sheet for more information . ★產品規格變更不另行通知 Specifications are subject to change without notice.

DC Axial Fan

TRS8015 SERIES 80X80X15mm

DIMENSIONS DRAWING UNIT：mm

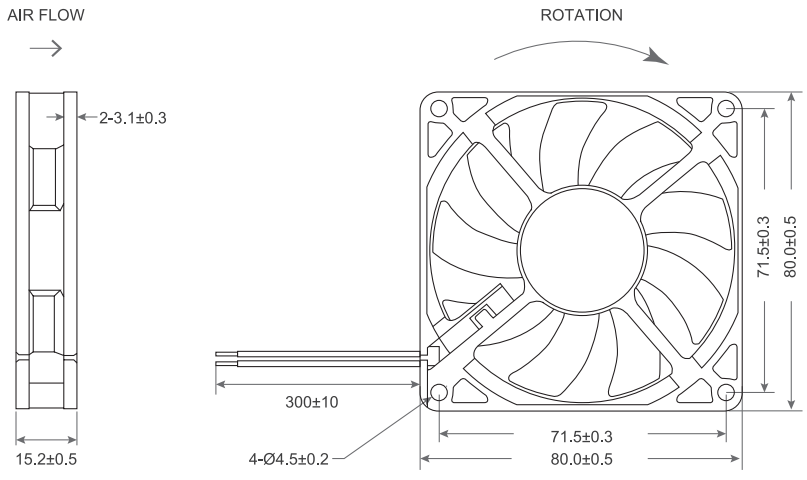

- Frame：Thermoplastic PBT UL94-V0
  外框材質：環保防火PBT
- Impeller：Thermoplastic PBT UL94-V0
  扇葉材質：環保防火PBT
- Bearing：※Sleeve・★WRB・◎Two Ball Bearing
  軸承：※含油・★WRB・◎滾珠軸承
- Unit Weight：48g
  風扇單體重量：48克

P&Q Curve At Rated Voltage

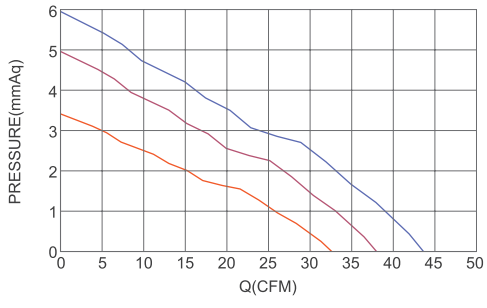

Model No.	Bearing Type	Voltage (VDC)	Current (A)	Power (W)	Speed (RPM)	Air Flow (CFM)	Air Flow (m^3/min)	Air Pressure (mmH_2O)	Air Pressure (Inch H_2O)	Noise (dBA)
TRS8015x05L	※★◎	5 (4.0~6.0)	0.11	0.55	2000	21.47	0.61	1.50	0.06	26.1
TRS8015x05M	※★◎	5 (4.0~6.0)	0.18	0.85	2500	26.84	0.76	2.34	0.09	28.9
TRS8015x12L	※★◎	12 (7.0~14.0)	0.06	0.72	2000	21.47	0.61	1.50	0.06	26.1
TRS8015x12M	※★◎	12 (7.0~14.0)	0.10	1.20	2500	26.84	0.76	2.34	0.09	28.9
TRS8015x12H	※★◎	12 (7.0~14.0)	0.12	1.44	3000	32.21	0.91	3.37	0.13	33.6
TRS8015x12VH	※★◎	12 (7.0~14.0)	0.18	2.16	3500	37.58	1.06	4.58	0.18	38.3
TRS8015x12SH	※★◎	12 (7.0~14.0)	0.22	2.64	4000	42.95	1.21	5.98	0.24	42.6
TRS8015x24L	※★◎	24 (15.0~27.0)	0.03	0.72	2000	21.47	0.61	1.50	0.06	26.1
TRS8015x24M	※★◎	24 (15.0~27.0)	0.05	1.20	2500	26.84	0.76	2.34	0.09	28.9
TRS8015x24H	※★◎	24 (15.0~27.0)	0.06	1.44	3000	32.21	0.91	3.37	0.13	33.6
TRS8015x24VH	※★◎	24 (15.0~27.0)	0.09	2.16	3500	37.58	1.06	4.58	0.18	38.3
TRS8015x24SH	※★◎	24 (15.0~27.0)	0.11	2.64	4000	42.95	1.21	5.98	0.24	42.6

(x) Bearing System ※：Sleeve ★：WRB ◎：Ball

★如果您需要的轉速或電壓或功能不在這份清單上，請與我們業務聯繫 Please contact us, if the SPEC you need is not in the list.

★產品詳細數據及功能請參閱承認書 Please see the approval sheet for more information . ★產品規格變更不另行通知 Specifications are subject to change without notice.

DC Axial Fan
TRS8015 G SERIES 80X80X15mm

- Frame：Thermoplastic PBT UL94-V0
  外框材質：環保防火PBT
- Impeller：Thermoplastic PBT UL94-V0
  扇葉材質：環保防火PBT
- Bearing：※Sleeve・◎Two Ball bearing
  軸承：※含油・◎滾珠軸承
- Unit Weight：56.2g
  風扇單體重量：56.2克

P&Q Curve At Rated Voltage

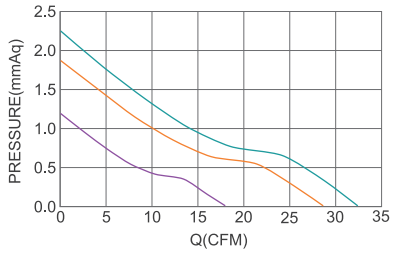

DIMENSIONS DRAWING UNIT：mm

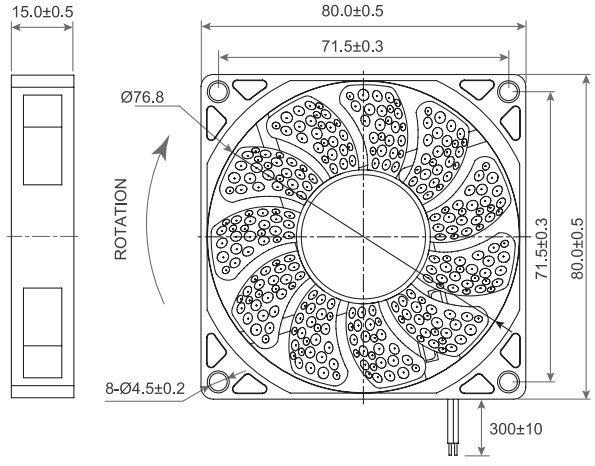

Model No.	Bearing Type	Voltage (VDC)	Current (A)	Power (W)	Speed (RPM)	Air Flow (CFM)	Air Flow (m3/min)	Air Pressure (mmH2O)	Air Pressure (Inch H2O)	Noise (dBA)
TRS8015B12L	※◎	12 (6.0~13.8)	0.11	1.32	2000	17.56	0.50	1.21	0.05	21.8
TRS8015B12M	※◎	12 (6.0~13.8)	0.13	1.56	2500	27.00	0.76	1.83	0.07	27.2
TRS8015B12H	※◎	12 (6.0~13.8)	0.19	2.28	3000	32.43	0.92	2.26	0.09	31.7

DC Axial Fan
SRL8015 SERIES 80X80X15mm

- Frame：Thermoplastic PBT UL94-V0
  外框材質：環保防火PBT
- Impeller：Thermoplastic PBT UL94-V0
  扇葉材質：環保防火PBT
- Bearing：※Sleeve・★WRB・◎TwoBall
  軸承：※含油・★WRB・◎滾珠軸承
- Unit Weight：54.4g
  風扇單體重量：54.4克

P&Q Curve At Rated Voltage

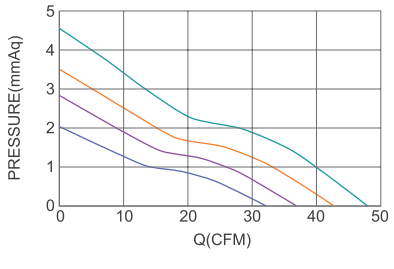

DIMENSIONS DRAWING UNIT：mm

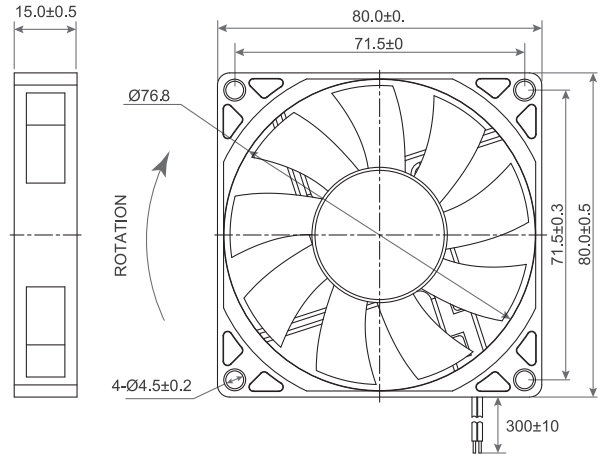

Model No.	Bearing Type	Voltage (VDC)	Current (A)	Power (W)	Speed (RPM)	Air Flow (CFM)	Air Flow (m^3/min)	Air Pressure (mmH_2O)	Air Pressure (Inch H_2O)	Noise (dBA)
SRLx0801512M	※★◎	12 (10.2~12.6)	0.15	1.80	2500	32.14	0.91	2.04	0.08	25.5
SRLx0801512H	※★◎	12 (10.8~13.8)	0.25	3.00	3000	36.81	1.04	2.73	0.11	30.3
SRLx0801512HH	※★◎	12 (10.8~13.8)	0.30	3.60	3500	42.73	1.21	3.50	0.14	34.1
SRLx0801512EH	※★◎	12 (10.8~13.8)	0.30	3.60	4000	47.99	1.36	4.53	0.18	40.2

(x) Bearing System ※：Sleeve ★：WRB ◎：Ball

★如果您需要的轉速或電壓或功能不在這份清單上，請與我們業務聯繫 Please contact us, if the SPEC you need is not in the list.

★產品詳細數據及功能請參閱承認書 Please see the approval sheet for more information . ★產品規格變更不另行通知 Specifications are subject to change without notice.

DC Axial Fan

TRS8020 SERIES 80X80X20mm

DIMENSIONS DRAWING UNIT：mm

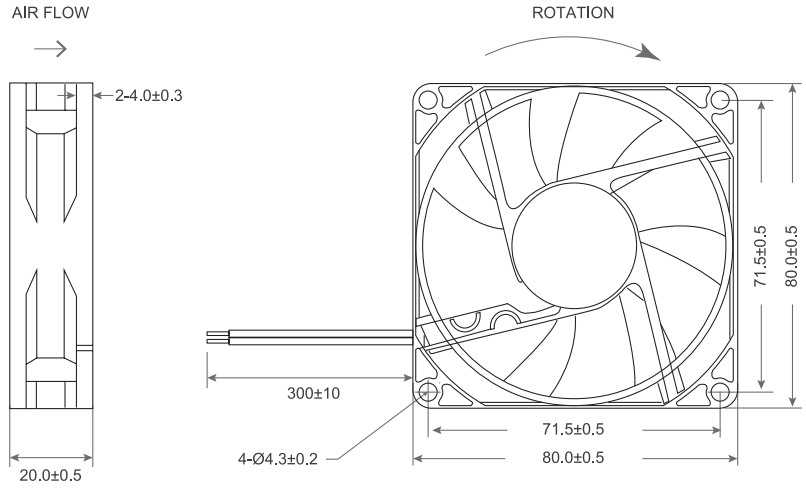

P&Q Curve At Rated Voltage

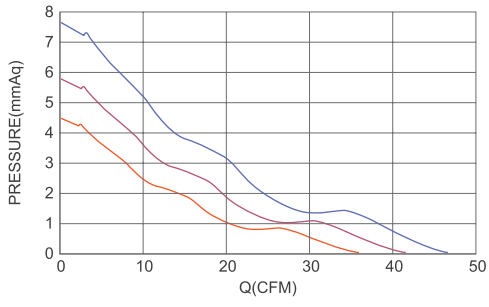

- Frame：Thermoplastic PBT UL94-V0
  外框材質：環保防火PBT
- Impeller：Thermoplastic PBT UL94-V0
  扇葉材質：環保防火PBT
- Bearing：※Sleeve・★WRB・◎Two Ball Bearing
  軸承：※含油・★WRB・◎滾珠軸承
- Unit Weight：52g
  風扇單體重量：52克

Model No.	Bearing Type	Voltage (VDC)	Current (A)	Power (W)	Speed (RPM)	Air Flow (CFM)	Air Flow (m^3/min)	Air Pressure (mmH_2O)	Air Pressure (Inch H_2O)	Noise (dBA)
TRS8020x12D	※★◎	12 (7.0~14.0)	0.06	0.72	2500	26.08	0.74	2.34	0.09	24.5
TRS8020x12L	※★◎	12 (7.0~14.0)	0.10	1.20	3000	31.10	0.88	3.33	0.13	29.5
TRS8020x12M	※★◎	12 (7.0~14.0)	0.14	1.68	3500	36.12	1.02	4.49	0.18	32.4
TRS8020x12H	※★◎	12 (7.0~14.0)	0.18	2.16	4000	41.13	1.16	5.83	0.23	36.4
TRS8020x12VH	※★◎	12 (7.0~14.0)	0.22	2.64	4500	46.15	1.31	7.52	0.30	39.0
TRS8020x24D	※★◎	24 (15.0~27.0)	0.03	0.72	2500	26.08	0.74	2.34	0.09	24.5
TRS8020x24L	※★◎	24 (15.0~27.0)	0.05	1.20	3000	31.10	0.88	3.33	0.13	29.5
TRS8020x24M	※★◎	24 (15.0~27.0)	0.07	1.68	3500	36.12	1.02	4.49	0.18	32.4
TRS8020x24H	※★◎	24 (15.0~27.0)	0.09	2.16	4000	41.13	1.16	5.83	0.23	36.4
TRS8020x24VH	※★◎	24 (15.0~27.0)	0.11	2.64	4500	46.15	1.31	7.52	0.30	39.4

X Bearing System ※：Sleeve ★：WRB ◎：Ball

★如果您需要的轉速或電壓或功能不在這份清單上，請與我們業務聯繫 Please contact us, if the SPEC you need is not in the list.

★產品詳細數據及功能請參閱承認書 Please see the approval sheet for more information . ★產品規格變更不另行通知 Specifications are subject to change without notice.

DC Axial Fan

TRS8025 SERIES 80X80X25mm

DIMENSIONS DRAWING UNIT：mm

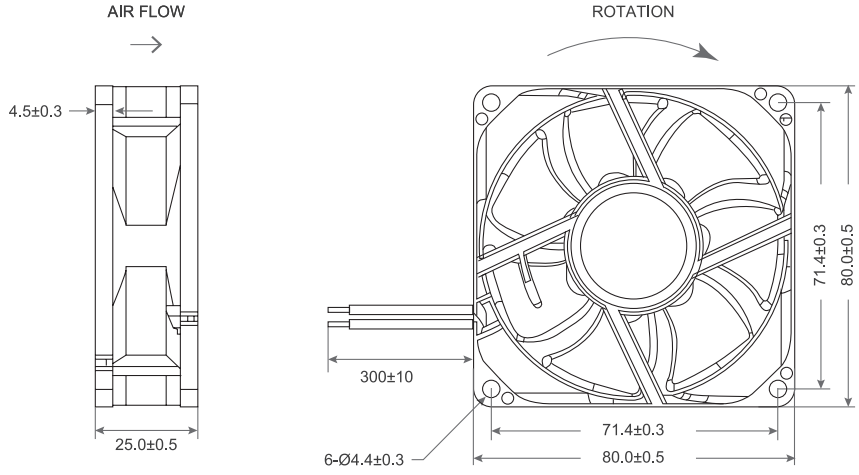

- Frame：Thermoplastic PBT UL94-V0
  外框材質：環保防火PBT
- Impeller：Thermoplastic PBT UL94-V0
  扇葉材質：環保防火PBT
- Bearing：※Sleeve・★WRB・◎Two Ball Bearing
  軸承：※含油・★WRB・◎滾珠軸承
- Unit Weight：54g
  風扇單體重量：54克

P&Q Curve At Rated Voltage

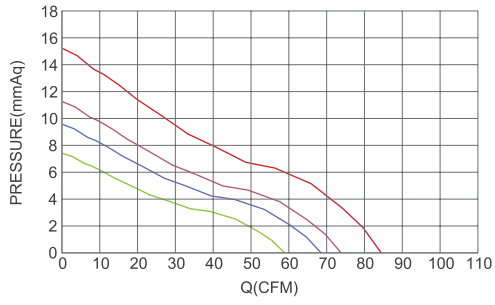

Model No.	Bearing Type	Voltage (VDC)	Current (A)	Power (W)	Speed (RPM)	Air Flow (CFM)	Air Flow (m^3/min)	Air Pressure (mmH₂O)	Air Pressure (Inch H₂O)	Noise (dBA)
TRS8025x12L	※★◎	12 (7.0~14.0)	0.12	1.44	3000	43.23	1.22	3.77	0.15	29.9
TRS8025x12M	※★◎	12 (7.0~14.0)	0.18	2.16	3600	51.59	1.46	5.37	0.21	36.2
TRS8025x12H	※★◎	12 (7.0~14.0)	0.28	3.36	4200	59.96	1.70	7.25	0.29	39.4
TRS8025x12VH	※★◎	12 (7.0~14.0)	0.35	4.20	4800	68.33	1.93	9.42	0.37	42.0
TRS8025x12SH	※★◎	12 (7.0~14.0)	0.44	5.28	5200	73.91	2.09	11.02	0.43	44.5
TRS8025x12UH	※★◎	12 (7.0~14.0)	0.64	7.68	6200	83.52	2.36	15.09	0.59	49.4
TRS8025x24L	※★◎	24 (15.0~27.0)	0.06	1.44	3000	43.23	1.22	3.77	0.15	29.9
TRS8025x24M	※★◎	24 (15.0~27.0)	0.09	2.16	3600	51.59	1.46	5.37	0.21	36.2
TRS8025x24H	※★◎	24 (15.0~27.0)	0.14	3.36	4200	59.96	1.70	7.25	0.29	39.4
TRS8025x24VH	※★◎	24 (15.0~27.0)	0.18	4.20	4800	68.33	1.93	9.42	0.37	42.0
TRS8025x24SH	※★◎	24 (15.0~27.0)	0.22	5.28	5200	73.91	2.09	11.02	0.43	44.5
TRS8025x24UH	※★◎	24 (15.0~27.0)	0.32	7.68	6200	83.52	2.36	15.09	0.59	49.4
TRS8025x48L	※★◎	48 (35.0~57.0)	0.03	1.44	3000	43.23	1.22	3.77	0.15	29.9
TRS8025x48M	※★◎	48 (35.0~57.0)	0.05	2.16	3600	51.59	1.46	5.37	0.21	36.2
TRS8025x48H	※★◎	48 (35.0~57.0)	0.07	3.36	4200	59.96	1.70	7.25	0.29	39.4
TRS8025x48VH	※★◎	48 (35.0~57.0)	0.09	4.20	4800	68.33	1.93	9.42	0.37	42.0
TRS8025x48SH	※★◎	48 (35.0~57.0)	0.11	5.28	5200	73.91	2.09	11.02	0.43	44.5
TRS8025x48UH	※★◎	48 (35.0~57.0)	0.16	7.68	6200	83.52	2.36	15.09	0.59	49.4

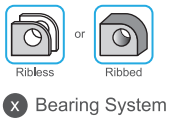

X Bearing System ※：Sleeve ★：WRB ◎：Ball

★如果您需要的轉速或電壓或功能不在這份清單上，請與我們業務聯繫 Please contact us, if the SPEC you need is not in the list.

★產品詳細數據及功能請參閱承認書 Please see the approval sheet for more information . ★產品規格變更不另行通知 Specifications are subject to change without notice.

DC Axial Fan

TRD8025 SERIES 80X80X25mm

DIMENSIONS DRAWING UNIT：mm

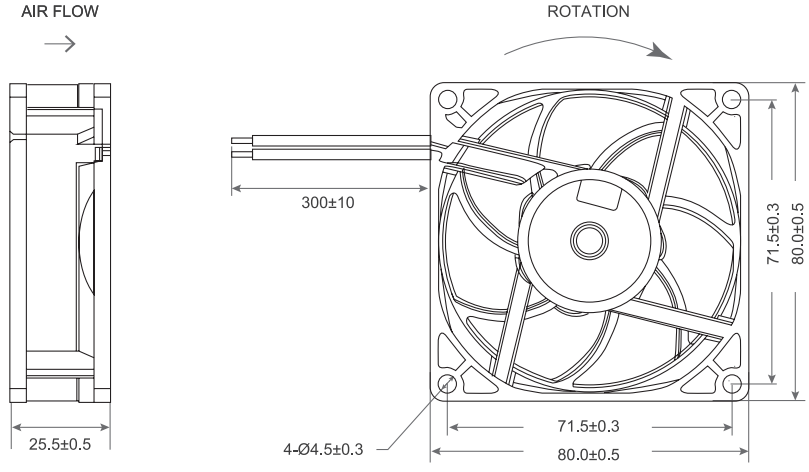

- Frame：Thermoplastic PBT UL94-V0
  外框材質：環保防火PBT
- Impeller：Thermoplastic PBT UL94-V0
  扇葉材質：環保防火PBT
- Bearing：※Sleeve・★WRB・◎Two Ball Bearing
  軸承：※含油・★WRB・◎滾珠軸承
- Unit Weight：75g
  風扇單體重量：75克

P&Q Curve At Rated Voltage

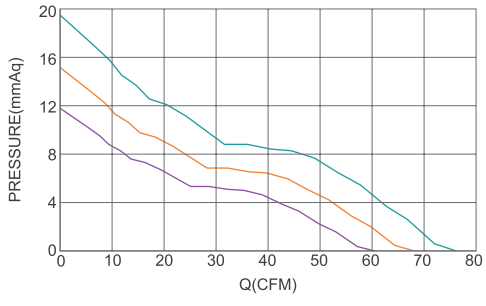

Model No.	Bearing Type	Voltage (VDC)	Current (A)	Power (W)	Speed (RPM)	Air Flow (CFM)	Air Flow (m^3/min)	Air Pressure (mmH_2O)	Air Pressure (Inch H_2O)	Noise (dBA)
TRD8025x12L	※★◎	12 (7.0~14.0)	0.06	0.72	3700	42.28	1.20	5.85	0.23	29.9
TRD8025x12M	※★◎	12 (7.0~14.0)	0.10	1.20	4500	51.42	1.45	8.65	0.34	35.0
TRD8025x12H	※★◎	12 (7.0~14.0)	0.20	2.40	5200	59.42	1.68	11.55	0.45	38.3
TRD8025x12VH	※★◎	12 (7.0~14.0)	0.28	3.36	5900	67.42	1.91	14.87	0.59	42.8
TRD8025x12SH	※★◎	12 (7.0~14.0)	0.36	4.32	6600	75.41	2.13	18.61	0.73	47.8
TRD8025x24L	※★◎	24 (15.0~27.0)	0.03	0.72	3700	42.28	1.20	5.85	0.23	29.9
TRD8025x24M	※★◎	24 (15.0~27.0)	0.05	1.20	4500	51.42	1.45	8.65	0.34	35.0
TRD8025x24H	※★◎	24 (15.0~27.0)	0.10	2.40	5200	59.42	1.68	11.55	0.45	38.3
TRD8025x24VH	※★◎	24 (15.0~27.0)	0.14	3.36	5900	67.42	1.91	14.87	0.59	42.8
TRD8025x24SH	※★◎	24 (15.0~27.0)	0.18	4.32	6600	75.41	2.13	18.61	0.73	47.8
TRD8025x48M	※★◎	48 (35.0~57.0)	0.03	1.20	4500	51.42	1.46	8.65	0.34	35.0
TRD8025x48H	※★◎	48 (35.0~57.0)	0.05	2.40	5200	59.42	1.68	11.55	0.45	38.3
TRD8025x24VH	※★◎	48 (35.0~57.0)	0.07	3.36	5900	67.42	1.91	14.87	0.59	42.8
TRD8025x48SH	※★◎	48 (35.0~57.0)	0.09	4.32	6600	75.41	2.13	18.61	0.73	47.8

Optional Frames：

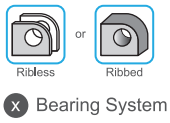

X Bearing System ※：Sleeve ★：WRB ◎：Ball

★如果您需要的轉速或電壓或功能不在這份清單上，請與我們業務聯繫 Please contact us, if the SPEC you need is not in the list.

★產品詳細數據及功能請參閱承認書 Please see the approval sheet for more information . ★產品規格變更不另行通知 Specifications are subject to change without notice.

DC Axial Fan
TRS8025 G SERIES 80X80X25mm

- Frame：Thermoplastic PBT UL94-V0
  外框材質：環保防火PBT
- Impeller：Thermoplastic PBT UL94-V0
  扇葉材質：環保防火PBT
- Bearing：※Sleeve・◎Two Ball bearing
  軸承：※含油・◎滾珠軸承
- Unit Weight：74.0g
  風扇單體重量：74.0克

P&Q Curve | At Rated Voltage

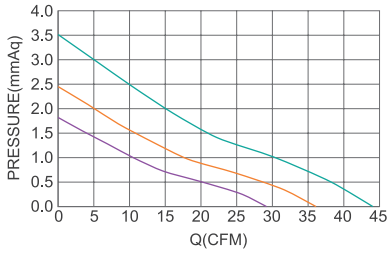

DIMENSIONS DRAWING | UNIT：mm

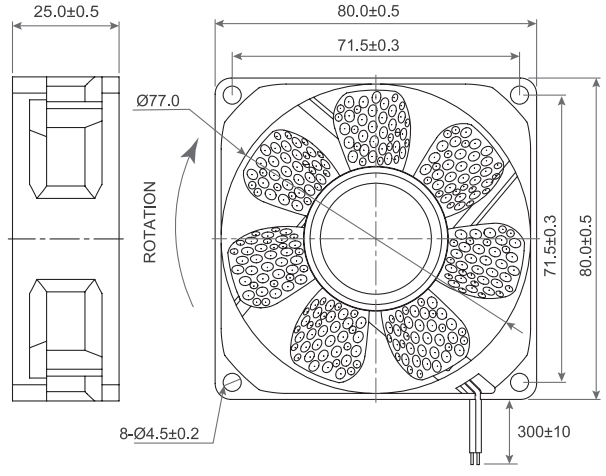

Model No.	Bearing Type	Voltage (VDC)	Current (A)	Power (W)	Speed (RPM)	Air Flow (CFM)	Air Flow (m^3/min)	Air Pressure (mmH₂O)	Air Pressure (Inch H₂O)	Noise (dBA)
TRS8025B12L	※◎	12 (6.0~13.8)	0.12	1.44	2000	29.11	0.82	1.86	0.07	19.5
TRS8025B12M	※◎	12 (6.0~13.8)	0.17	2.04	2500	36.04	1.02	2.46	0.10	22.6
TRS8025B12H	※◎	12 (6.0~13.8)	0.23	2.76	3000	44.09	1.25	3.54	0.14	30.3

DC Axial Fan
SRL8025 SERIES 80X80X25mm

- Frame：Thermoplastic PBT UL94-V0
  外框材質：環保防火PBT
- Impeller：Thermoplastic PBT UL94-V0
  扇葉材質：環保防火PBT
- Bearing：※Sleeve・★WRB・◎Two Ball
  軸承：※含油・★WRB・◎滾珠軸承
- Unit Weight：67.4g
  風扇單體重量：67.4克

P&Q Curve | At Rated Voltage

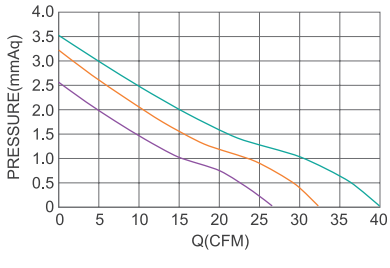

DIMENSIONS DRAWING | UNIT：mm

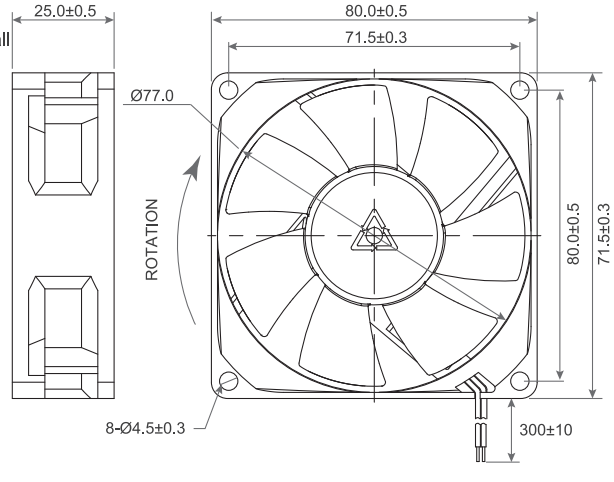

Model No.	Bearing Type	Voltage (VDC)	Current (A)	Power (W)	Speed (RPM)	Air Flow (CFM)	Air Flow (m^3/min)	Air Pressure (mmH₂O)	Air Pressure (Inch H₂O)	Noise (dBA)
SRLx01138812L	※★◎	12 (6.0~13.8)	0.12	1.44	2000	26.54	0.75	2.61	0.10	21.0
SRLx01138812M	※★◎	12 (6.0~13.8)	0.17	2.04	2500	32.37	0.92	3.26	0.13	27.4
SRLx01138812H	※★◎	12 (6.0~13.8)	0.23	2.76	3000	39.80	1.13	3.58	0.14	32.6
SRLx01138824L	※★◎	24 (12.0~26.0)	0.08	1.92	2000	26.54	0.75	2.61	0.10	21.0
SRLx01138824M	※★◎	24 (12.0~26.0)	0.12	2.88	2500	32.37	0.92	3.26	0.13	27.4
SRLx01138824H	※★◎	24 (12.0~26.0)	0.17	4.08	3000	39.80	1.13	3.58	0.14	32.6

(x) Bearing System ※：Sleeve ★：WRB ◎：Ball

★如果您需要的轉速或電壓或功能不在這份清單上，請與我們業務聯繫 Please contact us, if the SPEC you need is not in the list.
★產品詳細數據及功能請參閱承認書 Please see the approval sheet for more information . ★產品規格變更不另行通知 Specifications are subject to change without notice.

DC Axial Fan

TRD8032 SERIES 80X80X32mm

DIMENSIONS DRAWING UNIT：mm

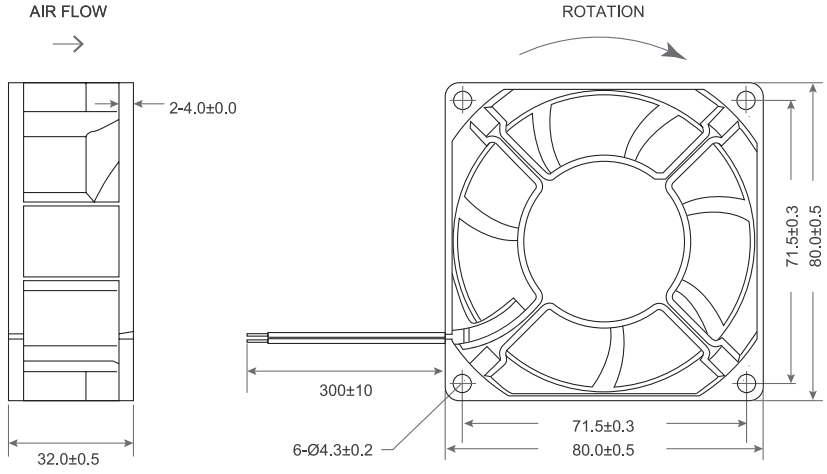

- Frame：Thermoplastic PBT UL94-V0
  外框材質：環保防火PBT
- Impeller：Thermoplastic PBT UL94-V0
  扇葉材質：環保防火PBT
- Bearing：※Sleeve・★WRB・◎Two Ball Bearing
  軸承：※含油・★WRB・◎滾珠軸承
- Unit Weight：95g
  風扇單體重量：95克

P&Q Curve At Rated Voltage

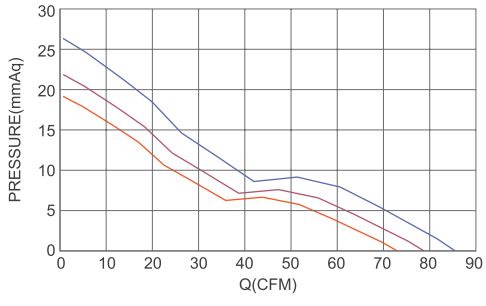

Model No.	Bearing Type	Voltage (VDC)	Current (A)	Power (W)	Speed (RPM)	Air Flow (CFM)	Air Flow (m^3/min)	Air Pressure (mmH2O)	Air Pressure (Inch H2O)	Noise (dBA)
TRD8032x12D	※★◎	12 (7.0~14.0)	0.24	2.88	4000	49.02	1.38	8.76	0.34	35.8
TRD8032x12L	※★◎	12 (7.0~14.0)	0.40	4.80	5000	60.98	1.72	13.55	0.53	39.5
TRD8032x12M	※★◎	12 (7.0~14.0)	0.52	6.24	5500	66.96	1.89	16.34	0.64	42.9
TRD8032x12H	※★◎	12 (7.0~14.0)	0.64	7.68	6000	72.94	2.06	19.39	0.76	46.2
TRD8032x12VH	※★◎	12 (7.0~14.0)	0.80	9.60	6500	78.92	2.23	22.70	0.89	47.9
TRD8032x12SH	※★◎	12 (7.0~14.0)	1.00	12.00	7000	84.90	2.40	26.27	1.03	49.4
TRD8032x24D	※★◎	24 (15.0~27.0)	0.12	2.88	4000	49.02	1.38	8.76	0.34	35.8
TRD8032x24L	※★◎	24 (15.0~27.0)	0.20	4.80	5000	60.98	1.72	13.55	0.53	39.5
TRD8032x24M	※★◎	24 (15.0~27.0)	0.26	6.24	5500	66.96	1.89	16.34	0.64	42.9
TRD8032x24H	※★◎	24 (15.0~27.0)	0.32	7.68	6000	72.94	2.06	19.39	0.76	46.2
TRD8032x24VH	※★◎	24 (15.0~27.0)	0.40	9.60	6500	78.92	2.23	22.70	0.89	47.9
TRD8032x24SH	※★◎	24 (15.0~27.0)	0.50	12.00	7000	84.90	2.40	26.27	1.03	49.4
TRD8032x48D	※★◎	48 (35.0~57.0)	0.06	2.88	4000	49.02	1.38	8.76	0.34	35.8
TRD8032x48L	※★◎	48 (35.0~57.0)	0.10	4.80	5000	60.98	1.72	13.55	0.53	39.5
TRD8032x48M	※★◎	48 (35.0~57.0)	0.13	6.24	5500	66.96	1.89	16.34	0.64	42.9
TRD8032x48H	※★◎	48 (35.0~57.0)	0.16	7.68	6000	72.94	2.06	19.39	0.76	46.2
TRD8032x48VH	※★◎	48 (35.0~57.0)	0.20	9.60	6500	78.92	2.23	22.70	0.89	47.9
TRD8032x48SH	※★◎	48 (35.0~57.0)	0.25	12.00	7000	84.90	2.40	26.27	1.03	49.4

(x) Bearing System ※：Sleeve ★：WRB ◎：Ball

★如果您需要的轉速或電壓或功能不在這份清單上，請與我們業務聯繫 Please contact us, if the SPEC you need is not in the list.

★產品詳細數據及功能請參閱承認書 Please see the approval sheet for more information . ★產品規格變更不另行通知 Specifications are subject to change without notice.

DC Axial Fan

TRD8032 U SERIES 80X80X32mm

DIMENSIONS DRAWING UNIT：mm

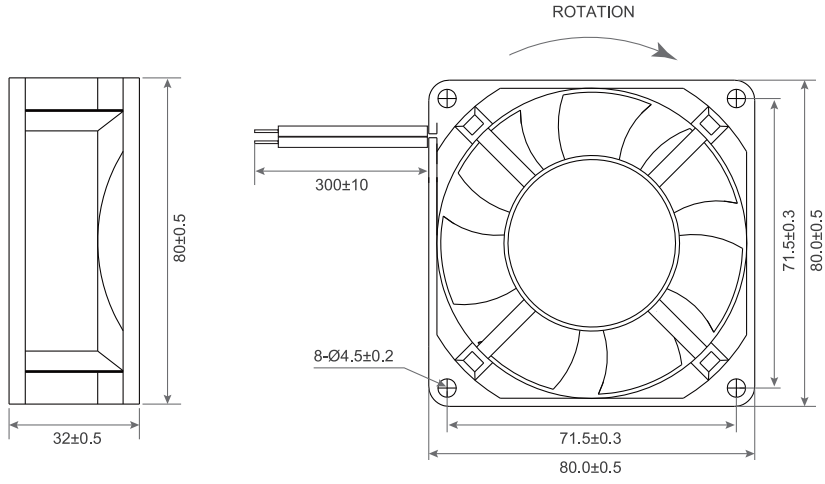

- Frame：Thermoplastic PBT UL94-V0
  外框材質：環保防火PBT
- Impeller：Thermoplastic PBT UL94-V0
  扇葉材質：環保防火PBT
- Bearing：※Sleeve・★WRB・◎Two Ball Bearing
  軸承：※含油・★WRB・◎滾珠軸承
- Unit Weight：180g
  風扇單體重量：180克

P&Q Curve At Rated Voltage

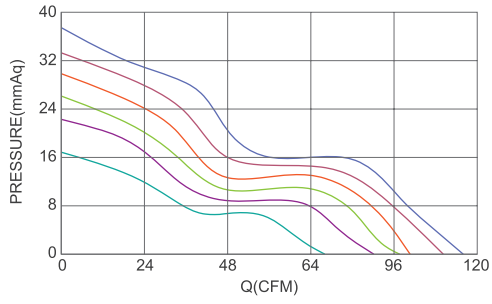

Model No.	Bearing Type	Voltage (VDC)	Current (A)	Power (W)	Speed (RPM)	Air Flow (CFM)	Air Flow (m^3/min)	Air Pressure (mmH2O)	Air Pressure (Inch H2O)	Noise (dBA)
TRD8032x12D	※◎	12 (7.0~14.0)	0.40	4.8	4000	49.89	1.413	8.51	0.335	46.8
TRD8032x12L	※◎	12 (7.0~14.0)	0.68	8.2	5000	61.29	1.736	11.63	0.458	50.3
TRD8032x12M	※◎	12 (7.0~14.0)	0.96	11.5	6000	75.50	2.138	16.78	0.661	52.0
TRD8032x12H	※◎	12 (7.0~14.0)	1.24	14.9	7000	88.93	2.518	22.39	0.881	54.2
TRD8032x12VH	※◎	12 (7.0~14.0)	1.51	18.2	8000	100.80	2.856	29.53	1.163	61.2
TRD8032x12SH	※◎	12 (7.0~14.0)	1.84	22.1	8500	107.13	3.034	32.90	1.295	63.5
TRD8032x24D	※◎	24 (15.0~27.0)	0.20	4.8	4000	49.89	1.413	8.51	0.335	46.8
TRD8032x24L	※◎	24 (15.0~27.0)	0.34	8.2	5000	61.29	1.736	11.63	0.458	50.3
TRD8032x24M	※◎	24 (15.0~27.0)	0.48	11.5	6000	75.50	2.138	16.78	0.661	52.0
TRD8032x24H	※◎	24 (15.0~27.0)	0.62	14.9	7000	88.93	2.518	22.39	0.881	54.2
TRD8032x24VH	※◎	24 (15.0~27.0)	0.76	18.2	8000	100.80	2.856	29.53	1.163	61.2
TRD8032x24SH	※◎	24 (15.0~27.0)	0.92	22.1	8500	107.13	3.034	32.90	1.295	63.5
TRD8032x48D	※◎	48 (35.0~57.0)	0.10	4.8	4000	49.89	1.413	8.51	0.335	46.8
TRD8032x48L	※◎	48 (35.0~57.0)	0.17	8.2	5000	61.29	1.736	11.63	0.458	50.3
TRD8032x48M	※◎	48 (35.0~57.0)	0.24	11.5	6000	75.50	2.138	16.78	0.661	52.0
TRD8032x48H	※◎	48 (35.0~57.0)	0.31	14.9	7000	88.93	2.518	22.39	0.881	54.2
TRD8032x48VH	※◎	48 (35.0~57.0)	0.38	18.2	8000	100.80	2.856	29.53	1.163	61.2
TRD8032x48SH	※◎	48 (35.0~57.0)	0.46	22.1	8500	107.13	3.034	32.90	1.295	63.5

(x) Bearing System ※：Sleeve ★：WRB ◎：Ball

★如果您需要的轉速或電壓或功能不在這份清單上，請與我們業務聯繫 Please contact us, if the SPEC you need is not in the list.

★產品詳細數據及功能請參閱承認書 Please see the approval sheet for more information . ★產品規格變更不另行通知 Specifications are subject to change without notice.

DC Axial Fan

TRD8038 SERIES 80X80X38mm

DIMENSIONS DRAWING UNIT：mm

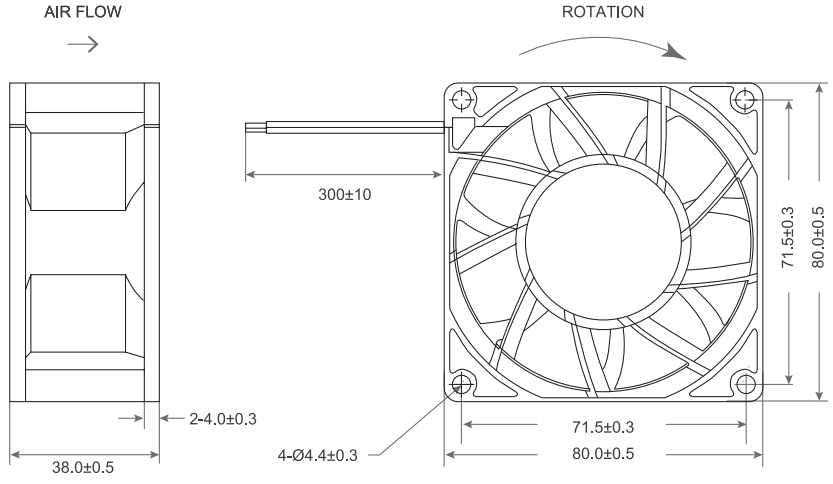

- ●Frame：Thermoplastic PBT UL94-V0
  外框材質：環保防火PBT
- ●Impeller：Thermoplastic PBT UL94-V0
  扇葉材質：環保防火PBT
- ●Bearing：★WRB・◎Two Ball Bearing
  軸承：★WRB・◎滾珠軸承
- ●Unit Weight：153g
  風扇單體重量：153克

P&Q Curve At Rated Voltage

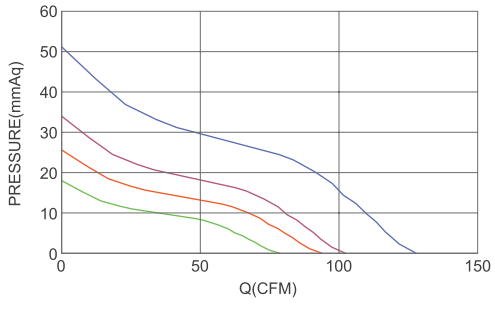

Model No.	Bearing Type	Voltage (VDC)	Current (A)	Power (W)	Speed (RPM)	Air Flow (CFM)	Air Flow (m^3/min)	Air Pressure (mmH_2O)	Air Pressure (Inch H_2O)	Noise (dBA)
TRD8038x12D	★◎	12 (7.0~14.0)	0.20	3.12	4000	51.23	1.45	8.49	0.33	36.9
TRD8038x12L	★◎	12 (7.0~14.0)	0.24	4.56	5000	63.72	1.80	13.14	0.51	42.3
TRD8038x12M	★◎	12 (7.0~14.0)	0.60	7.92	6000	76.22	2.16	18.80	0.74	47.7
TRD8038x12H	◎	12 (7.0~14.0)	0.88	12.00	7000	88.72	2.51	25.46	1.00	52.9
TRD8038x12VH	◎	12 (7.0~14.0)	1.10	14.88	8000	101.21	2.86	33.15	1.31	55.6
TRD8038x24D	★◎	24 (15.0~27.0)	0.10	3.12	4000	51.23	1.45	8.49	0.33	36.9
TRD8038x24L	★◎	24 (15.0~27.0)	0.12	3.84	5000	63.72	1.80	13.14	0.51	42.3
TRD8038x24M	★◎	24 (15.0~27.0)	0.30	7.92	6000	76.22	2.16	18.80	0.74	47.7
TRD8038x24H	◎	24 (15.0~27.0)	0.44	12.00	7000	88.72	2.51	25.46	1.00	52.9
TRD8038x24VH	◎	24 (15.0~27.0)	0.55	14.88	8000	101.21	2.86	33.15	1.31	55.6
TRD8038x24SH	◎	24 (15.0~27.0)	1.10	28.80	10000	126.21	3.57	51.54	2.03	61.4
TRD8038x48D	★◎	48 (35.0~57.0)	0.05	3.12	4000	51.23	1.45	8.49	0.33	36.9
TRD8038x48L	★◎	48 (35.0~57.0)	0.06	3.84	5000	63.72	1.80	13.14	0.51	42.3
TRD8038x48M	★◎	48 (35.0~57.0)	0.15	7.92	6000	76.22	2.16	18.80	0.74	47.7
TRD8038x48H	◎	48 (35.0~57.0)	0.22	12.00	7000	88.72	2.51	25.46	1.00	52.9
TRD8038x48VH	◎	48 (35.0~57.0)	0.27	14.88	8000	101.21	2.86	33.15	1.31	55.6
TRD8038x48SH	◎	48 (35.0~57.0)	0.55	28.80	10000	126.21	3.57	51.54	2.03	61.4

x Bearing System ※：Sleeve ★：WRB ◎：Ball

★如果您需要的轉速或電壓或功能不在這份清單上，請與我們業務聯繫 Please contact us, if the SPEC you need is not in the list.

★產品詳細數據及功能請參閱承認書 Please see the approval sheet for more information . ★產品規格變更不另行通知 Specifications are subject to change without notice.

DC Axial Fan

TRD8038 B SERIES 80X80X38mm

DIMENSIONS DRAWING UNIT：mm

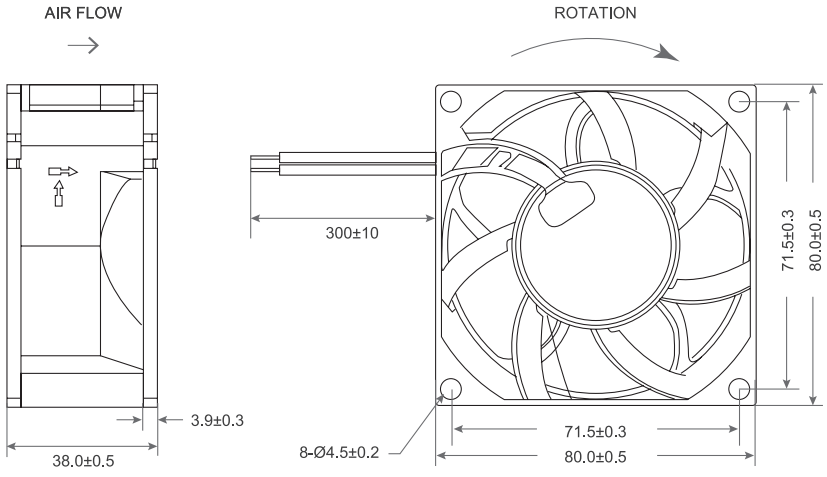

- Frame：Thermoplastic PBT UL94-V0
  外框材質：環保防火PBT
- Impeller：Thermoplastic PBT UL94-V0
  扇葉材質：環保防火PBT
- Bearing：★WRB・◎Two Ball Bearing
  軸承：★WRB・◎滾珠軸承
- Unit Weight：153g
  風扇單體重量：153克

P&Q Curve At Rated Voltage

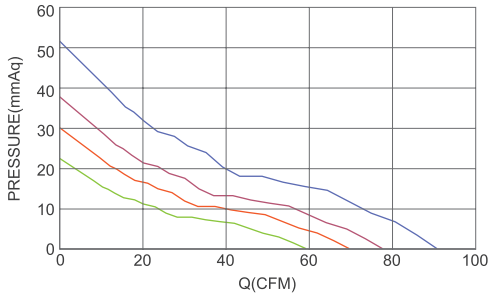

Model No.	Bearing Type	Voltage (VDC)	Current (A)	Power (W)	Speed (RPM)	Air Flow (CFM)	Air Flow (m^3/min)	Air Pressure (mmH2O)	Air Pressure (Inch H2O)	Noise (dBA)
TRD8038x12L	★◎	12 (7.0~14.0)	0.20	2.40	5200	50.19	1.42	15.71	0.62	39.9
TRD8038x12M	◎	12 (7.0~14.0)	0.32	3.84	6200	59.83	1.69	22.33	0.88	44.7
TRD8038x12H	◎	12 (7.0~14.0)	0.50	6.00	7200	69.49	1.97	30.11	1.19	47.4
TRD8038x24L	★◎	24 (15.0~27.0)	0.10	2.40	5200	50.19	1.42	15.71	0.62	39.9
TRD8038x24M	◎	24 (15.0~27.0)	0.16	3.84	6200	59.83	1.69	22.33	0.88	44.7
TRD8038x24H	◎	24 (15.0~27.0)	0.25	6.00	7200	69.49	1.97	30.11	1.19	47.4
TRD8038x24VH	◎	24 (15.0~27.0)	0.34	8.16	8000	77.21	2.18	37.18	1.46	51.0
TRD8038x24SH	◎	24 (15.0~27.0)	0.60	14.40	9400	90.72	2.57	51.33	2.02	56.4
TRD8038x48L	★◎	48 (35.0~57.0)	0.05	2.40	5200	50.19	1.42	15.71	0.62	39.9
TRD8038x48M	◎	48 (35.0~57.0)	0.08	3.84	6200	59.83	1.69	22.33	0.88	44.7
TRD8038x48H	◎	48 (35.0~57.0)	0.12	5.76	7200	69.49	1.97	30.11	1.19	47.4
TRD8038x48VH	◎	48 (35.0~57.0)	0.17	8.16	8000	77.21	2.18	37.18	1.46	51.0
TRD8038x48SH	◎	48 (35.0~57.0)	0.30	14.40	9400	90.72	2.57	51.33	2.02	56.4

Optional Frames：

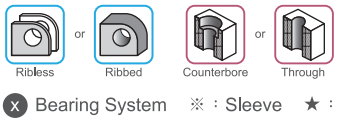

X Bearing System ※：Sleeve ★：WRB ◎：Ball

★如果您需要的轉速或電壓或功能不在這份清單上，請與我們業務聯繫 Please contact us, if the SPEC you need is not in the list.

★產品詳細數據及功能請參閱承認書 Please see the approval sheet for more information . ★產品規格變更不另行通知 Specifications are subject to change without notice.

DC Axial Fan

TRD8038 U SERIES 80X80X38mm

DIMENSIONS DRAWING UNIT：mm

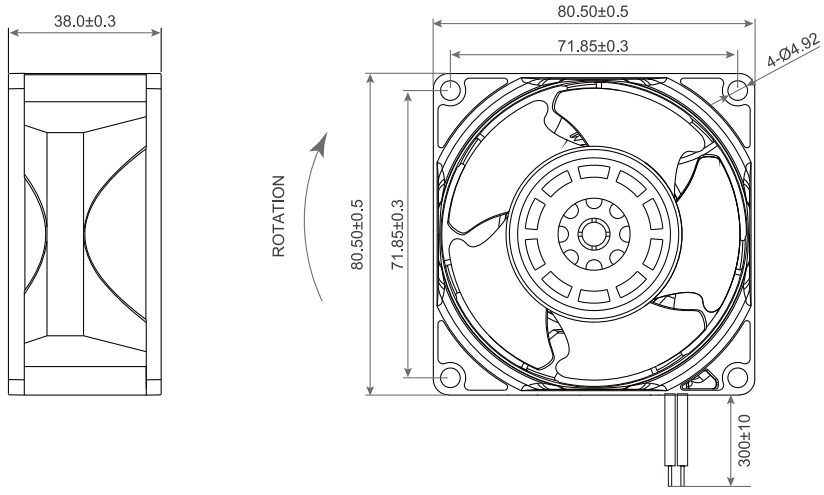

- Frame：Thermoplastic PBT UL94-V0
  外框材質：環保防火PBT
- Impeller：Thermoplastic PBT UL94-V0
  扇葉材質：環保防火PBT
- Bearing：◎Two Ball Bearing
  軸承：◎滾珠軸承
- Unit Weight：223g
  風扇單體重量：223克

P&Q Curve At Rated Voltage

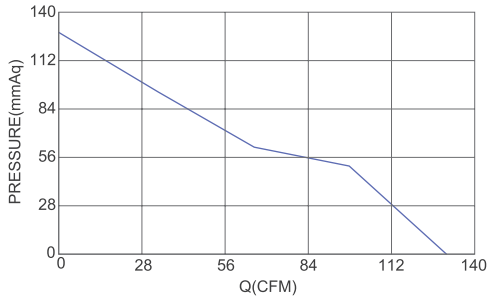

Model No.	Bearing Type	Voltage (VDC)	Current (A)	Power (W)	Speed (RPM)	Air Flow (CFM)	Air Flow (m^3/min)	Air Pressure (mmH_2O)	Air Pressure (Inch H_2O)	Noise (dBA)
TRD8038B12H	◎	12 (7.0~13.5)	3.6	43.2	15000	129.22	3.66	127.0	5.0	78.7
TRD8038B24H	◎	24 (18.0~26.5)	1.8	43.2	15000	129.22	3.66	127.0	5.0	78.7
TRD8038B48H	◎	48 (36.0~54.0)	0.9	43.2	15000	129.22	3.66	127.0	5.0	78.7

X Bearing System ※：Sleeve ★：WRB ◎：Ball

★如果您需要的轉速或電壓或功能不在這份清單上，請與我們業務聯繫 Please contact us, if the SPEC you need is not in the list.

★產品詳細數據及功能請參閱承認書 Please see the approval sheet for more information . ★產品規格變更不另行通知 Specifications are subject to change without notice.

DC Axial Fan

TRS9015 SERIES 90X90X15mm

DIMENSIONS DRAWING UNIT：mm

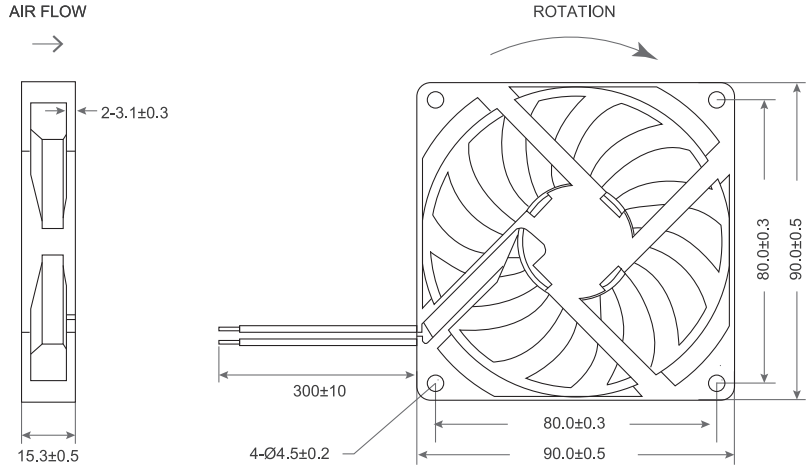

- Frame：Thermoplastic PBT UL94-V0
  外框材質：環保防火PBT
- Impeller：Thermoplastic PBT UL94-V0
  扇葉材質：環保防火PBT
- Bearing：※Sleeve・★WRB・◎Two Ball Bearing
  軸承：※含油・★WRB・◎滾珠軸承
- Unit Weight：50g
  風扇單體重量：50克

P&Q Curve At Rated Voltage

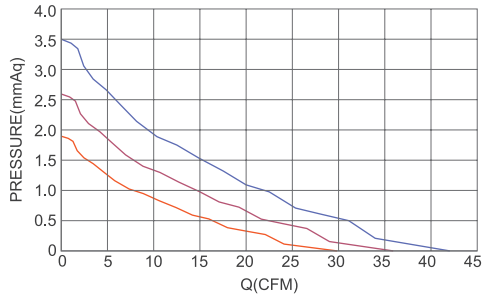

Model No.	Bearing Type	Voltage (VDC)	Current (A)	Power (W)	Speed (RPM)	Air Flow (CFM)	Air Flow (m^3/min)	Air Pressure (mmH_2O)	Air Pressure (Inch H_2O)	Noise (dBA)
TRS9015x05D	※★◎	5 (4.0~6.0)	0.17	0.85	2000	23.99	0.68	1.15	0.05	27.6
TRS9015x05L	※★◎	5 (4.0~6.0)	0.24	1.20	2500	29.99	0.85	1.80	0.07	31.4
TRS9015x12D	※★◎	12 (7.0~14.0)	0.07	0.84	2000	23.99	0.68	1.15	0.05	27.6
TRS9015x12L	※★◎	12 (7.0~14.0)	0.10	1.20	2500	29.99	0.85	1.80	0.07	31.4
TRS9015x12M	※★◎	12 (7.0~14.0)	0.17	2.04	3000	35.99	1.02	2.59	0.10	34.5
TRS9015x12H	※★◎	12 (7.0~14.0)	0.26	3.12	3500	41.99	1.19	3.52	0.14	37.5
TRS9015x24M	※★◎	24 (15.0~27.0)	0.05	1.20	2500	29.99	0.85	1.80	0.07	31.4
TRS9015x24H	※★◎	24(15.0~27.0)	0.08	1.92	3000	35.99	1.02	2.59	0.10	34.5
TRS9015x24VH	※★◎	24 (15.0~27.0)	0.13	3.12	3500	41.99	1.19	3.52	0.14	37.5

X Bearing System ※：Sleeve ★：WRB ◎：Ball

★如果您需要的轉速或電壓或功能不在這份清單上，請與我們業務聯繫 Please contact us, if the SPEC you need is not in the list.

★產品詳細數據及功能請參閱承認書 Please see the approval sheet for more information . ★產品規格變更不另行通知 Specifications are subject to change without notice.

DC Axial Fan

SRL9215 SERIES 92X92X15mm

DIMENSIONS DRAWING UNIT：mm

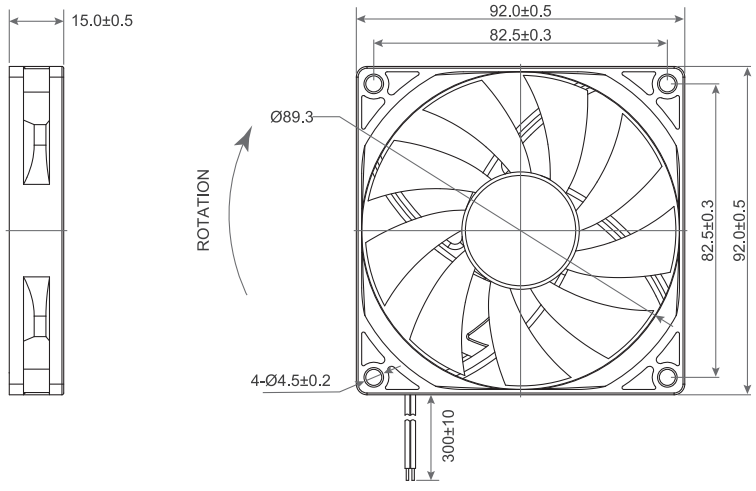

- Frame：Thermoplastic PBT UL94-V0
  外框材質：環保防火PBT
- Impeller：Thermoplastic PBT UL94-V0
  扇葉材質：環保防火PBT
- Bearing：※Sleeve・★WRB・◎Two Ball Bearing
  軸承：※含油・★WRB・◎滾珠軸承
- Unit Weight：60.8g
  風扇單體重量：60.8克

P&Q Curve At Rated Voltage

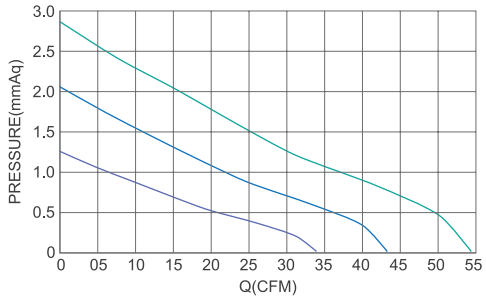

Model No.	Bearing Type	Voltage (VDC)	Current (A)	Power (W)	Speed (RPM)	Air Flow (CFM)	Air Flow (m^3/min)	Air Pressure (mmH_2O)	Air Pressure (Inch H_2O)	Noise (dBA)
SRLx0921512LB	※★◎	12 (4.0~13.8)	0.20	2.40	2000	34.09	0.96	1.29	0.05	23.0
SRLx0921512MB	※★◎	12 (3.5~13.8)	0.23	2.76	2500	43.53	1.23	2.08	0.08	29.4
SRLx0921512HB	※★◎	12 (3.5~13.8)	0.45	5.40	3000	54.65	1.55	2.91	0.11	36.5

x Bearing System ※：Sleeve ★：WRB ◎：Ball

★如果您需要的轉速或電壓或功能不在這份清單上，請與我們業務聯繫 Please contact us, if the SPEC you need is not in the list.

★產品詳細數據及功能請參閱承認書 Please see the approval sheet for more information . ★產品規格變更不另行通知 Specifications are subject to change without notice.

DC Axial Fan

TRS9225 SERIES 92X92X25mm

DIMENSIONS DRAWING UNIT：mm

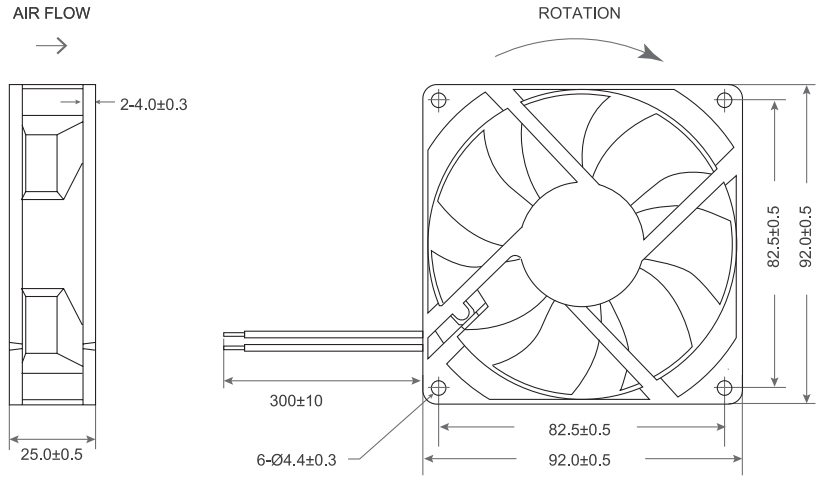

- Frame：Thermoplastic PBT UL94-V0
  外框材質：環保防火PBT
- Impeller：Thermoplastic PBT UL94-V0
  扇葉材質：環保防火PBT
- Bearing：※Sleeve・★WRB・◎Two Ball Bearing
  軸承：※含油・★WRB・◎滾珠軸承
- Unit Weight：78g
  風扇單體重量：78克

P&Q Curve At Rated Voltage

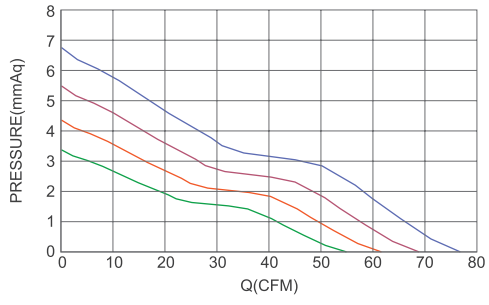

Model No.	Bearing Type	Voltage (VDC)	Current (A)	Power (W)	Speed (RPM)	Air Flow (CFM)	Air Flow (m^3/min)	Air Pressure (mmH2O)	Air Pressure (Inch H2O)	Noise (dBA)
TRS9225x12D	※★◎	12 (7.0~14.0)	0.12	1.44	2000	39.14	1.10	1.76	0.07	30.3
TRS9225x12L	※★◎	12 (7.0~14.0)	0.20	2.40	2800	54.05	1.52	3.35	0.13	36.7
TRS9225x12M	※★◎	12 (7.0~14.0)	0.26	3.12	3200	61.51	1.74	4.34	0.17	39.1
TRS9225x12H	※★◎	12 (7.0~14.0)	0.30	3.60	3600	68.97	1.95	5.46	0.21	42.8
TRS9225x12VH	※★◎	24 (15.0~27.0)	0.44	5.28	4000	76.42	2.16	6.71	0.26	46.7
TRS9225x24D	※★◎	24 (15.0~27.0)	0.06	1.44	2000	39.14	1.10	1.76	0.07	30.3
TRS9225x24L	※★◎	24 (15.0~27.0)	0.10	2.40	2800	54.05	1.52	3.35	0.13	36.7
TRS9225x24M	※★◎	24 (15.0~27.0)	0.13	3.12	3200	61.51	1.74	4.34	0.17	39.1
TRS9225x24H	※★◎	24 (15.0~27.0)	0.15	3.60	3600	68.97	1.95	5.46	0.21	42.8
TRS9225x24VH	※★◎	24 (15.0~27.0)	0.20	4.80	4000	76.42	2.16	6.71	0.26	46.7
TRS9225x48M	※★◎	48 (35.0~57.0)	0.07	3.36	3200	61.51	1.74	4.34	0.17	39.1
TRS9225x48H	※★◎	48 (35.0~57.0)	0.08	3.84	3600	68.97	1.95	5.46	0.21	42.8
TRS9225x48VH	※★◎	48 (35.0~57.0)	0.10	4.80	4000	76.42	2.16	6.71	0.26	46.7

x Bearing System ※：Sleeve ★：WRB ◎：Ball

★如果您需要的轉速或電壓或功能不在這份清單上，請與我們業務聯繫 Please contact us, if the SPEC you need is not in the list.

★產品詳細數據及功能請參閱承認書 Please see the approval sheet for more information . ★產品規格變更不另行通知 Specifications are subject to change without notice.

DC Axial Fan

TRS9225 B SERIES 92X92X25mm

DIMENSIONS DRAWING UNIT：mm

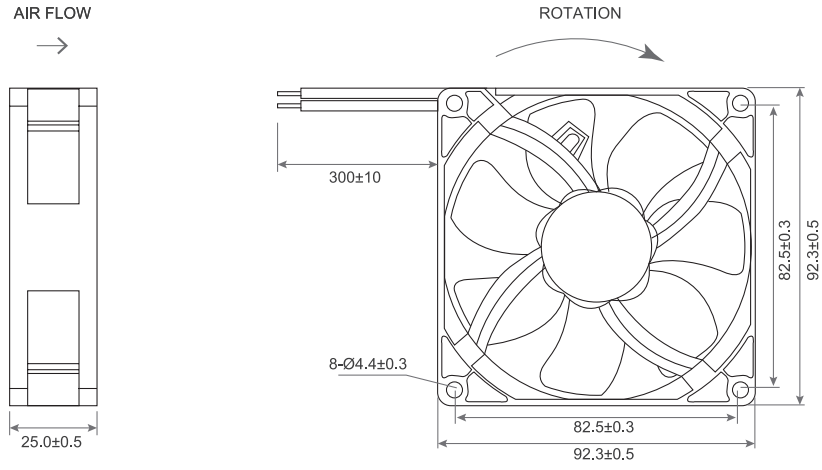

- Frame：Thermoplastic PBT UL94-V0
  外框材質：環保防火PBT
- Impeller：Thermoplastic PBT UL94-V0
  扇葉材質：環保防火PBT
- Bearing：※Sleeve・★WRB・◎Two Ball Bearing
  軸承：◎滾珠軸承
- Unit Weight：76g
  風扇單體重量：76克

P&Q Curve At Rated Voltage

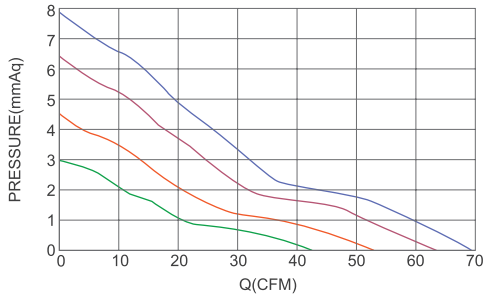

Model No.	Bearing Type	Voltage (VDC)	Current (A)	Power (W)	Speed (RPM)	Air Flow (CFM)	Air Flow (m^3/min)	Air Pressure (mmH_2O)	Air Pressure (Inch H_2O)	Noise (dBA)
TRS9225B12L	◎	12 (7.0~14.0)	0.10	1.30	2600	43.03	1.22	2.96	0.12	34.2
TRS9225B12M	◎	12 (7.0~14.0)	0.20	2.40	3200	52.96	1.50	4.49	0.18	39.9
TRS9225B12H	◎	12 (7.0~14.0)	0.30	3.70	3800	62.89	1.78	6.33	0.25	44.3
TRS9225B12VH	◎	12 (7.0~14.0)	0.45	5.40	4200	69.51	1.97	7.73	0.30	46.9
TRS9225B24L	◎	24 (15.0~27.0)	0.05	1.30	2600	43.03	1.22	2.96	0.12	34.2
TRS9225B24M	◎	24 (15.0~27.0)	0.10	2.40	3200	52.96	1.50	4.49	0.18	39.9
TRS9225B24H	◎	24 (15.0~27.0)	0.15	3.70	3800	62.89	1.78	6.33	0.25	44.3
TRS9225B24VH	◎	24 (15.0~27.0)	0.23	5.40	4200	69.51	1.97	7.73	0.30	46.9
TRS9225B48L	◎	48 (35.0~57.0)	0.03	1.30	2600	43.03	1.22	2.96	0.12	34.2
TRS9225B48M	◎	48 (35.0~57.0)	0.05	2.40	3200	52.96	1.50	4.49	0.18	39.9
TRS9225B48H	◎	48 (35.0~57.0)	0.07	3.70	3800	62.89	1.78	6.33	0.25	44.3
TRS9225B48VH	◎	48 (35.0~57.0)	0.11	5.40	4200	69.51	1.97	7.73	0.30	46.9

X Bearing System ※：Sleeve ★：WRB ◎：Ball

★如果您需要的轉速或電壓或功能不在這份清單上，請與我們業務聯繫 Please contact us, if the SPEC you need is not in the list.

★產品詳細數據及功能請參閱承認書 Please see the approval sheet for more information . ★產品規格變更不另行通知 Specifications are subject to change without notice.

DC Axial Fan

TRD9225 SERIES 92X92X25mm

DIMENSIONS DRAWING UNIT：mm

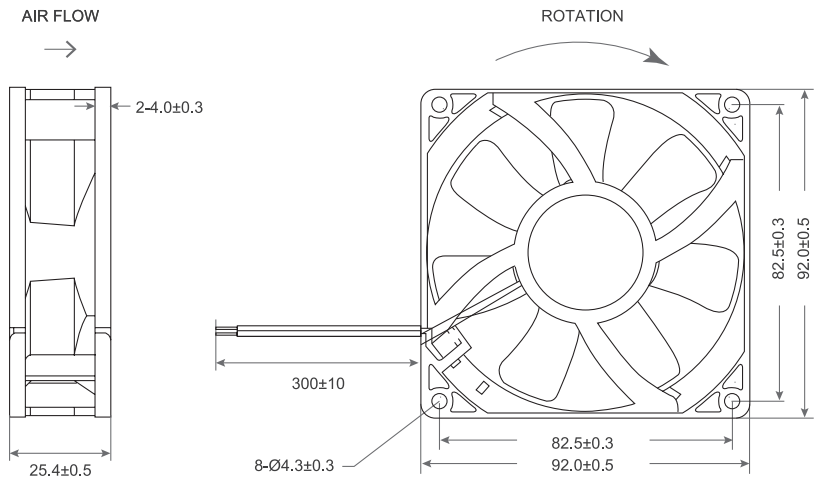

- Frame：Thermoplastic PBT UL94-V0
  外框材質：環保防火PBT
- Impeller：Thermoplastic PBT UL94-V0
  扇葉材質：環保防火PBT
- Bearing：※Sleeve・★WRB・◎Two Ball Bearing
  軸承：※含油・★WRB・◎滾珠軸承
- Unit Weight：120g
  風扇單體重量：120克

P&Q Curve At Rated Voltage

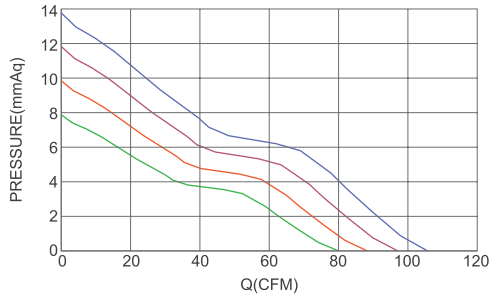

Model No.	Bearing Type	Voltage (VDC)	Current (A)	Power (W)	Speed (RPM)	Air Flow (CFM)	Air Flow (m^3/min)	Air Pressure (mmH2O)	Air Pressure (Inch H2O)	Noise (dBA)
TRD9225x12D	※★◎	12 (7.0~14.0)	0.12	1.44	2400	52.76	1.49	3.48	0.14	35.0
TRD9225x12L	※★◎	12 (7.0~14.0)	0.21	2.52	3000	65.95	1.87	5.44	0.21	40.9
TRD9225x12M	※★◎	12 (7.0~14.0)	0.38	4.56	3600	79.14	2.24	7.83	0.31	45.1
TRD9225x12H	※★◎	12 (7.0~14.0)	0.50	6.00	4000	87.94	2.49	9.67	0.38	48.0
TRD9225x12VH	※★◎	12 (7.0~14.0)	0.62	7.44	4400	96.73	2.74	11.70	0.46	50.8
TRD9225x12SH	※★◎	12 (7.0~14.0)	0.84	10.08	4800	105.52	2.99	13.92	0.55	53.0
TRD9225x24D	※★◎	24 (15.0~27.0)	0.06	1.44	2400	52.76	1.49	3.48	0.14	35.0
TRD9225x24L	※★◎	24 (15.0~27.0)	0.11	2.64	3000	65.95	1.87	5.44	0.21	40.9
TRD9225x24M	※★◎	24 (15.0~27.0)	0.19	4.56	3600	79.14	2.24	7.83	0.31	45.1
TRD9225x24H	※★◎	24 (15.0~27.0)	0.25	6.00	4000	87.94	2.49	9.67	0.38	48.0
TRD9225x24VH	※★◎	24 (15.0~27.0)	0.31	7.44	4400	96.73	2.74	11.70	0.46	50.8
TRD9225x24SH	※★◎	24 (15.0~27.0)	0.42	10.08	4800	105.52	2.99	13.92	0.55	53.0
TRD9225x48L	※★◎	48 (35.0~57.0)	0.05	2.40	3000	65.95	1.87	5.44	0.21	40.9
TRD9225x48M	※★◎	48 (35.0~57.0)	0.10	4.80	3600	79.14	2.24	7.83	0.31	45.1
TRD9225x48H	※★◎	48 (35.0~57.0)	0.13	6.24	4000	87.94	2.49	9.67	0.38	48.0
TRD9225x48VH	※★◎	48 (35.0~57.0)	0.16	7.68	4400	96.73	2.74	11.70	0.46	50.8
TRD9225x48SH	※★◎	48 (35.0~57.0)	0.21	10.08	4800	105.52	2.99	13.92	0.55	53.0

x Bearing System ※：Sleeve ★：WRB ◎：Ball

★如果您需要的轉速或電壓或功能不在這份清單上，請與我們業務聯繫 Please contact us, if the SPEC you need is not in the list.

★產品詳細數據及功能請參閱承認書 Please see the approval sheet for more information . ★產品規格變更不另行通知 Specifications are subject to change without notice.

DC Axial Fan

TRD9225 B SERIES 92X92X25mm

DIMENSIONS DRAWING UNIT：mm

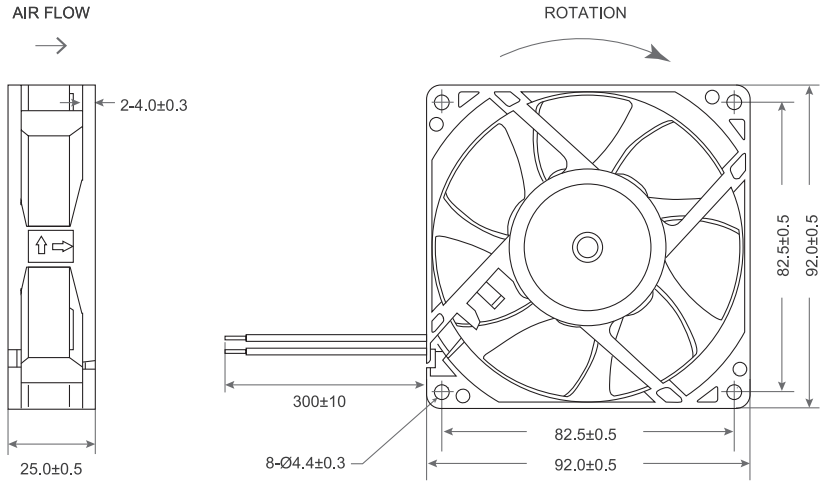

P&Q Curve At Rated Voltage

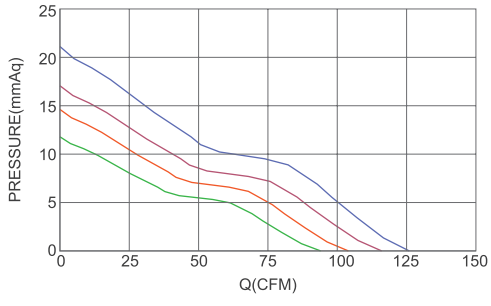

- Frame：Thermoplastic PBT UL94-V0
  外框材質：環保防火PBT
- Impeller：Thermoplastic PBT UL94-V0
  扇葉材質：環保防火PBT
- Bearing：※Sleeve・★WRB・◎Two Ball Bearing
  軸承：※含油・★WRB・◎滾珠軸承
- Unit Weight：120g
  風扇單體重量：120克

Model No.	Bearing Type	Voltage (VDC)	Current (A)	Power (W)	Speed (RPM)	Air Flow (CFM)	Air Flow (m^3/min)	Air Pressure (mmH_2O)	Air Pressure (Inch H_2O)	Noise (dBA)
TRD9225x12L	※★◎	12 (7.0~14.0)	0.25	3.00	4000	83.69	2.37	9.39	0.37	39.2
TRD9225x12M	※★◎	12 (7.0~14.0)	0.34	4.08	4500	94.15	2.66	11.89	0.47	42.4
TRD9225x12H	※★◎	12 (7.0~14.0)	0.46	5.52	5000	104.62	2.96	14.67	0.58	45.8
TRD9225x12VH	※★◎	12 (7.0~14.0)	0.63	7.56	5500	115.08	3.26	17.76	0.70	49.4
TRD9225x12SH	※★◎	12 (7.0~14.0)	0.80	9.60	6000	125.54	3.55	21.13	0.83	53.4
TRD9225x24L	※★◎	24 (15.0~27.0)	0.13	3.00	4000	83.69	2.37	9.39	0.37	39.2
TRD9225x24M	※★◎	24 (15.0~27.0)	0.17	4.08	4500	94.15	2.66	11.89	0.47	42.4
TRD9225x24H	※★◎	24 (15.0~27.0)	0.23	5.52	5000	104.62	2.96	14.67	0.58	45.8
TRD9225x24VH	※★◎	24 (15.0~27.0)	0.32	7.56	5500	115.08	3.26	17.76	0.70	49.4
TRD9225x24SH	※★◎	24 (15.0~27.0)	0.40	9.60	6000	125.54	3.55	21.13	0.83	53.4
TRD9225x48L	※★◎	48 (35.0~57.0)	0.06	3.00	4000	83.69	2.37	9.39	0.37	39.2
TRD9225x48M	※★◎	48 (35.0~57.0)	0.09	4.08	4500	94.15	2.66	11.89	0.47	42.4
TRD9225x48H	※★◎	48 (35.0~57.0)	0.12	5.52	5000	104.62	2.96	14.67	0.58	45.8
TRD9225x48VH	※★◎	48 (35.0~57.0)	0.16	7.56	5500	115.08	3.26	17.76	0.70	49.4
TRD9225x48SH	※★◎	48 (35.0~57.0)	0.20	9.60	6000	125.54	3.55	21.13	0.83	53.4

(x) Bearing System ※：Sleeve ★：WRB ◎：Ball

★如果您需要的轉速或電壓或功能不在這份清單上，請與我們業務聯繫 Please contact us, if the SPEC you need is not in the list.

★產品詳細數據及功能請參閱承認書 Please see the approval sheet for more information . ★產品規格變更不另行通知 Specifications are subject to change without notice.

DC Axial Fan
TRS9225 G SERIES 92X92X25mm

- Frame：Thermoplastic PBT UL94-V0
  外框材質：環保防火PBT
- Impeller：Thermoplastic PBT UL94-V0
  扇葉材質：環保防火PBT
- Bearing：※Sleeve・◎Two Ball bearing
  軸承：※含油・◎滾珠軸承
- Unit Weight：66.0g
  風扇單體重量：66.0克

P&Q Curve | At Rated Voltage

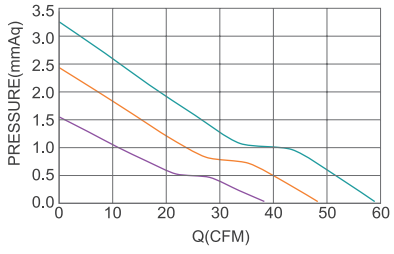

DIMENSIONS DRAWING | UNIT：mm

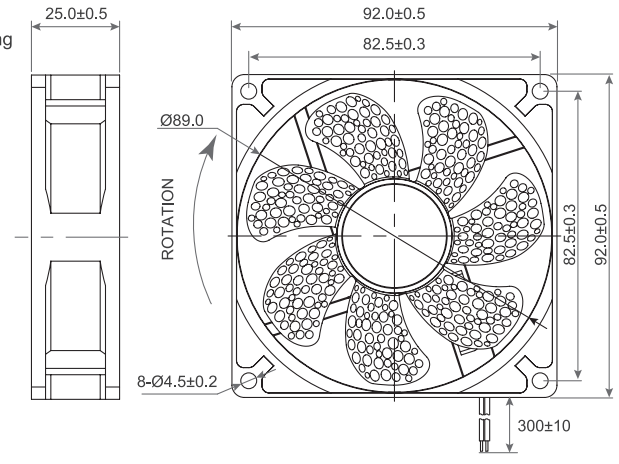

Model No.	Bearing Type	Voltage (VDC)	Current (A)	Power (W)	Speed (RPM)	Air Flow (CFM)	Air Flow (m^3/min)	Air Pressure (mmH₂O)	Air Pressure (Inch H₂O)	Noise (dBA)
TRS9225X12L	※◎	12 (7.0~13.8)	0.18	2.16	2000	38.13	1.08	1.57	0.06	22.4
TRS9225X12M	※◎	12 (7.0~13.8)	0.26	3.12	2500	47.94	1.36	2.47	0.10	29.3
TRS9225BX12H	※◎	12 (7.0~13.8)	0.35	4.20	3000	58.78	1.66	3.31	0.13	33.6

DC Axial Fan
SRL9225 SERIES 92X92X25mm

- Frame：Thermoplastic PBT UL94-V0
  外框材質：環保防火PBT
- Impeller：Thermoplastic PBT UL94-V0
  扇葉材質：環保防火PBT
- Bearing：※Sleeve・★WRB・◎Two Ball
  軸承：※含油・★WRB・◎滾珠軸承
- Unit Weight：63.4g
  風扇單體重量：63.4克

P&Q Curve | At Rated Voltage

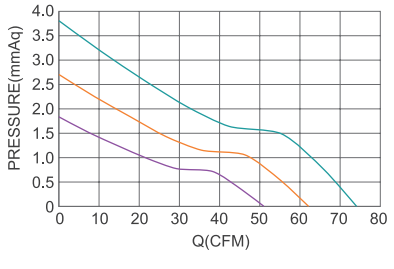

DIMENSIONS DRAWING | UNIT：mm

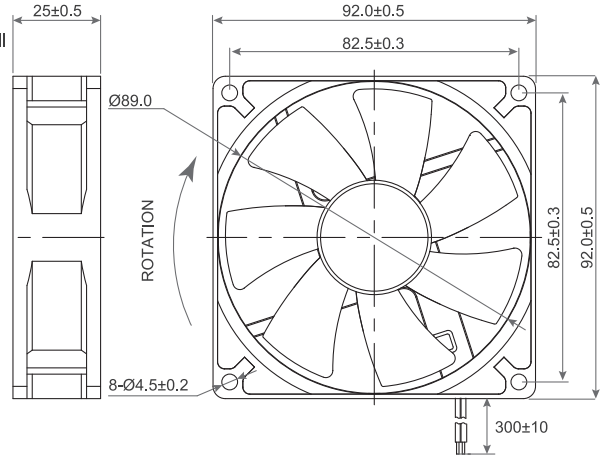

Model No.	Bearing Type	Voltage (VDC)	Current (A)	Power (W)	Speed (RPM)	Air Flow (CFM)	Air Flow (m^3/min)	Air Pressure (mmH₂O)	Air Pressure (Inch H₂O)	Noise (dBA)
SRLx0922512L	※★◎	12 (10.8~13.8)	0.18	2.20	2000	50.85	1.44	1.84	0.07	27.3
SRLx0922512M	※★◎	12 (6.0~13.8)	0.27	3.20	2500	62.29	1.76	2.70	0.11	34.5
SRLx0922512H	※★◎	12 (6.0~13.8)	0.45	5.40	3000	73.93	2.09	3.82	0.15	39.8

(x) Bearing System ※：Sleeve ★：WRB ◎：Ball

★如果您需要的轉速或電壓或功能不在這份清單上，請與我們業務聯繫 Please contact us, if the SPEC you need is not in the list.
★產品詳細數據及功能請參閱承認書 Please see the approval sheet for more information . ★產品規格變更不另行通知 Specifications are subject to change without notice.

DC Axial Fan

TRD9225 U SERIES 92X92X25mm

DIMENSIONS DRAWING UNIT：mm

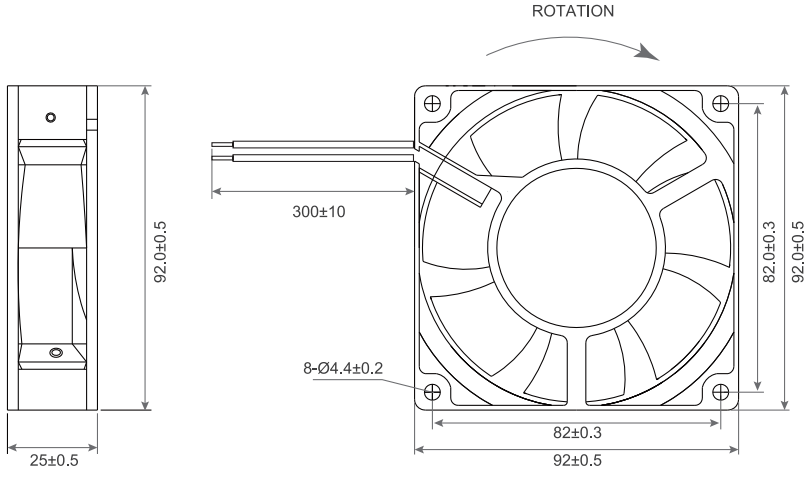

- Frame：Aluminum
  外框材質：鋁框
- Impeller：Thermoplastic PBT UL94-V0
  扇葉材質：環保防火PBT
- Bearing：※Sleeve・★WRB・◎Two Ball Bearing
  軸承：※含油・★WRB・◎滾珠軸承
- Unit Weight：158g
  風扇單體重量：158克

P&Q Curve At Rated Voltage

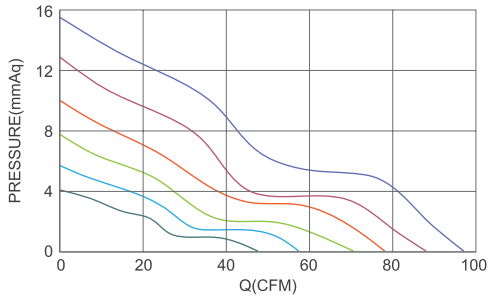

Model No.	Bearing Type	Voltage (VDC)	Current (A)	Power (W)	Speed (RPM)	Air Flow (CFM)	Air Flow (m^3/min)	Air Pressure (mmH_2O)	Air Pressure (Inch H_2O)	Noise (dBA)
TRD9225x12D	※◎★	12 (7.0~13.5)	0.30	3.6	2500	46.8	1.326	3.98	0.157	35.5
TRD9225x12L	※◎★	12 (7.0~13.5)	0.45	5.4	3000	56.6	1.605	5.71	0.225	41.1
TRD9225x12M	※◎★	12 (7.0~13.5)	0.51	6.1	3500	69.1	1.959	7.81	0.307	45.5
TRD9225x12H	※◎★	12 (7.0~13.5)	0.64	7.7	4000	77.3	2.189	10.08	0.397	48.3
TRD9225x12VH	※◎★	12 (7.0~13.5)	0.81	9.7	4500	87.6	2.482	12.87	0.507	53.7
TRD9225x12SH	※◎★	12 (7.0~13.5)	1.10	13.2	5000	96.9	2.745	15.57	0.613	55.0
TRD9225x24D	※◎★	24 (18.0~26.5)	0.15	3.6	2500	46.8	1.326	3.98	0.157	35.5
TRD9225x24L	※◎★	24 (18.0~26.5)	0.23	5.4	3000	56.6	1.605	5.71	0.225	41.1
TRD9225x24M	※◎★	24 (18.0~26.5)	0.26	6.1	3500	69.1	1.959	7.81	0.307	45.5
TRD9225x24H	※◎★	24 (18.0~26.5)	0.32	7.7	4000	77.3	2.189	10.08	0.397	48.3
TRD9225x24VH	※◎★	24 (18.0~26.5)	0.40	9.7	4500	87.6	2.482	12.87	0.507	53.7
TRD9225x24SH	※◎★	24 (18.0~26.5)	0.55	13.2	5000	96.9	2.745	15.57	0.613	55.0
TRD9225x48D	※◎★	48 (36.0~54.0)	0.08	3.6	2500	46.8	1.326	3.98	0.157	35.5
TRD9225x48L	※◎★	48 (36.0~54.0)	0.11	5.4	3000	56.6	1.605	5.71	0.225	41.1
TRD9225x48M	※◎★	48 (36.0~54.0)	0.13	6.1	3500	69.1	1.959	7.81	0.307	45.5
TRD9225x48H	※◎★	48 (36.0~54.0)	0.16	7.7	4000	77.3	2.189	10.08	0.397	48.3
TRD9225x48VH	※◎★	48 (36.0~54.0)	0.20	9.7	4500	87.6	2.482	12.87	0.507	53.7
TRD9225x48SH	※◎★	48 (36.0~54.0)	0.28	13.2	5000	96.9	2.745	15.57	0.613	55.0

(x) Bearing System ※：Sleeve ★：WRB ◎：Ball

★如果您需要的轉速或電壓或功能不在這份清單上，請與我們業務聯繫 Please contact us, if the SPEC you need is not in the list.

★產品詳細數據及功能請參閱承認書 Please see the approval sheet for more information . ★產品規格變更不另行通知 Specifications are subject to change without notice.

DC Axial Fan

TRD9228 SERIES 92X92X28mm

DIMENSIONS DRAWING UNIT：mm

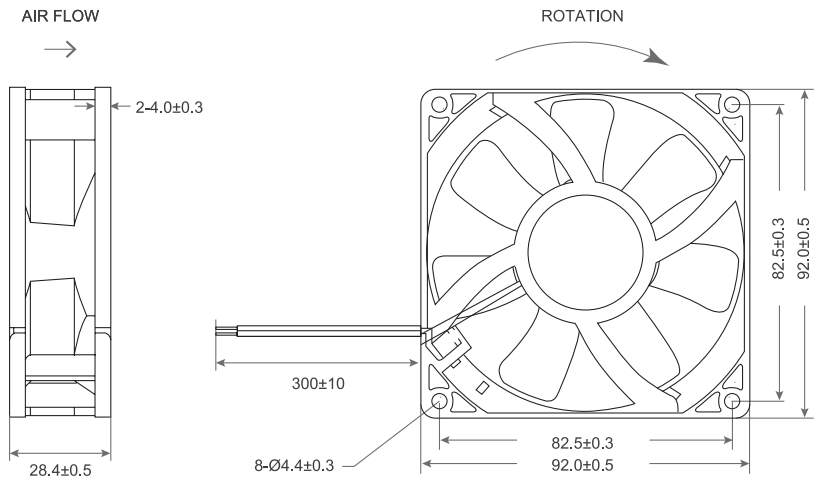

- Frame：Thermoplastic PBT UL94-V0
  外框材質：環保防火PBT
- Impeller：Thermoplastic PBT UL94-V0
  扇葉材質：環保防火PBT
- Bearing：※Sleeve・★WRB・◎Two Ball Bearing
  軸承：※含油・★WRB・◎滾珠軸承
- Unit Weight：120g
  風扇單體重量：120克

P&Q Curve At Rated Voltage

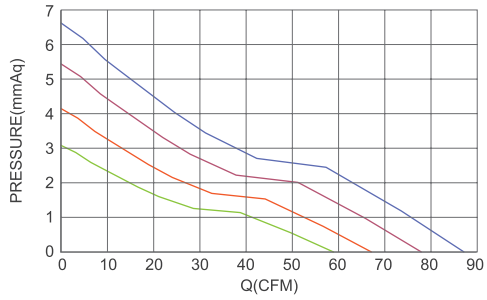

Model No.	Bearing Type	Voltage (VDC)	Current (A)	Power (W)	Speed (RPM)	Air Flow (CFM)	Air Flow (m^3/min)	Air Pressure (mmH2O)	Air Pressure (Inch H2O)	Noise (dBA)
TRD9228x12L	※★◎	12 (7.0~14.0)	0.16	1.92	2400	58.00	1.64	3.05	0.12	34.4
TRD9228x12M	※★◎	12 (7.0~14.0)	0.25	3.00	2800	67.67	1.91	4.15	0.16	38.0
TRD9228x12H	※★◎	12 (7.0~14.0)	0.41	4.92	3200	77.33	2.19	5.42	0.21	41.6
TRD9228x12VH	※★◎	12 (7.0~14.0)	0.54	6.48	3600	87.00	2.46	6.86	0.27	44.8
TRD9228x24L	※★◎	24 (15.0~27.0)	0.08	1.92	2400	58.00	1.64	3.05	0.12	34.4
TRD9228x24M	※★◎	24 (15.0~27.0)	0.12	2.88	2800	67.67	1.91	4.15	0.16	38.0
TRD9228x24H	※★◎	24 (15.0~27.0)	0.20	4.80	3200	77.33	2.19	5.42	0.21	41.6
TRD9228x24VH	※★◎	24 (15.0~27.0)	0.27	6.48	3600	87.00	2.46	6.86	0.27	44.8

(x) Bearing System ※：Sleeve ★：WRB ◎：Ball

★如果您需要的轉速或電壓或功能不在這份清單上，請與我們業務聯繫 Please contact us, if the SPEC you need is not in the list.

★產品詳細數據及功能請參閱承認書 Please see the approval sheet for more information . ★產品規格變更不另行通知 Specifications are subject to change without notice.

DC Axial Fan

TRD9232 SERIES 92X92X32mm

DIMENSIONS DRAWING UNIT：mm

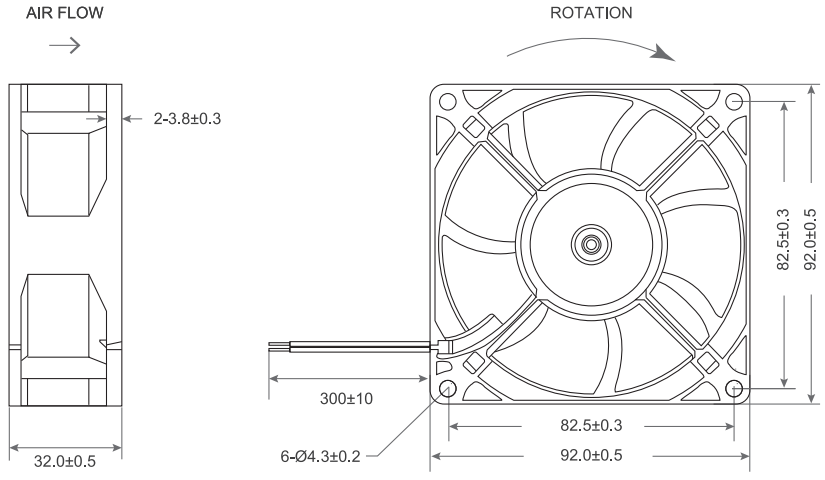

- Frame：Thermoplastic PBT UL94-V0
  外框材質：環保防火PBT
- Impeller：Thermoplastic PBT UL94-V0
  扇葉材質：環保防火PBT
- Bearing：※Sleeve・★WRB・◎Two Ball Bearing
  軸承：※含油・★WRB・◎滾珠軸承
- Unit Weight：150g
  風扇單體重量：150克

P&Q Curve At Rated Voltage

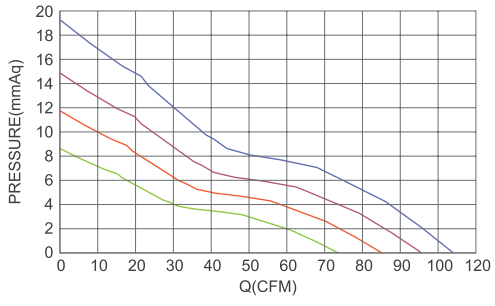

Model No.	Bearing Type	Voltage (VDC)	Current (A)	Power (W)	Speed (RPM)	Air Flow (CFM)	Air Flow (m^3/min)	Air Pressure (mmH_2O)	Air Pressure (Inch H_2O)	Noise (dBA)
TRD9232x12D	※★◎	12 (7.0~14.0)	0.22	2.64	2600	50.67	1.43	4.13	0.16	38.0
TRD9232x12L	※★◎	12 (7.0~14.0)	0.31	3.72	3200	61.92	1.75	6.16	0.24	43.0
TRD9232x12M	※★◎	12 (7.0~14.0)	0.46	5.52	3800	73.18	2.07	8.61	0.34	48.8
TRD9232x12H	※★◎	12 (7.0~14.0)	0.60	7.20	4400	84.45	2.39	11.46	0.45	49.7
TRD9232x12VH	※★◎	12 (7.0~14.0)	0.98	11.76	5000	95.70	2.71	14.72	0.58	52.8
TRD9232x12SH	※★◎	12 (7.0~14.0)	1.10	26.40	5600	106.96	3.03	18.39	0.72	57.2
TRD9232x24D	※★◎	24 (15.0~27.0)	0.11	2.64	2600	50.67	1.43	4.13	0.16	38.0
TRD9232x24L	※★◎	24 (15.0~27.0)	0.16	3.84	3200	61.92	1.75	6.16	0.24	43.0
TRD9232x24M	※★◎	24 (15.0~27.0)	0.23	5.52	3800	73.18	2.07	8.61	0.34	48.8
TRD9232x24H	※★◎	24 (15.0~27.0)	0.30	7.20	4400	84.45	2.39	11.46	0.45	49.7
TRD9232x24VH	※★◎	24 (15.0~27.0)	0.49	11.76	5000	95.70	2.71	14.72	0.58	52.8
TRD9232x24SH	※★◎	24 (15.0~27.0)	0.55	13.20	5600	106.96	3.03	18.39	0.72	57.2
TRD9232x48D	※★◎	48 (35.0~57.0)	0.06	2.88	2600	50.67	1.43	4.13	0.16	38.0
TRD9232x48L	※★◎	48 (35.0~57.0)	0.08	3.84	3200	61.92	1.75	6.16	0.24	43.0
TRD9232x48M	※★◎	48 (35.0~57.0)	0.11	5.28	3800	73.18	2.07	8.61	0.34	48.8
TRD9232x48H	※★◎	48 (35.0~57.0)	0.15	7.20	4400	84.45	2.39	11.46	0.45	49.7
TRD9232x48VH	※★◎	48 (35.0~57.0)	0.24	11.52	5000	95.70	2.71	14.72	0.58	52.8
TRD9232x48SH	※★◎	48 (35.0~57.0)	0.28	13.44	5600	106.96	3.03	18.39	0.72	57.2

(x) Bearing System ※：Sleeve ★：WRB ◎：Ball

★如果您需要的轉速或電壓或功能不在這份清單上，請與我們業務聯繫 Please contact us, if the SPEC you need is not in the list.

★產品詳細數據及功能請參閱承認書 Please see the approval sheet for more information . ★產品規格變更不另行通知 Specifications are subject to change without notice.

DC Axial Fan

TRD9238 SERIES 92X92X38mm

DIMENSIONS DRAWING UNIT：mm

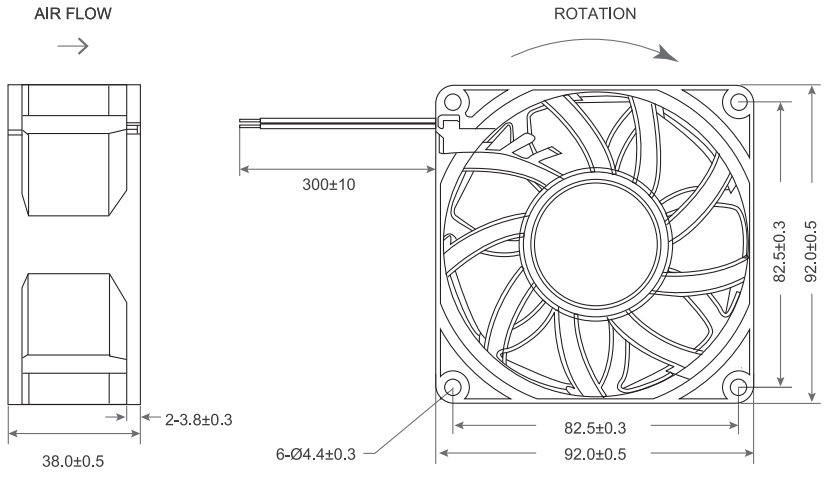

P&Q Curve At Rated Voltage

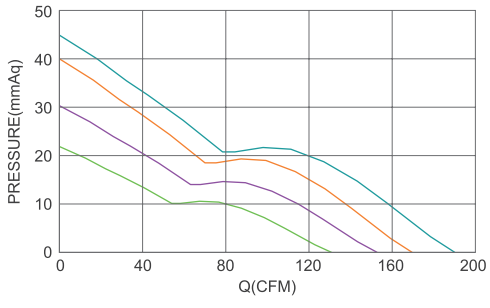

- Frame：Thermoplastic PBT UL94-V0
  外框材質：環保防火PBT
- Impeller：Thermoplastic PBT UL94-V0
  扇葉材質：環保防火PBT
- Bearing：※Sleeve・★WRB・◎Two Ball Bearing
  軸承：※含油・★WRB・◎滾珠軸承
- Unit Weight：198g
  風扇單體重量：198克

Model No.	Bearing Type	Voltage (VDC)	Current (A)	Power (W)	Speed (RPM)	Air Flow (CFM)	Air Flow (m^3/min)	Air Pressure (mmH2O)	Air Pressure (Inch H2O)	Noise (dBA)
TRD9238x12D	※★◎	12 (7.0~14.0)	0.42	5.04	4000	87.48	2.47	10.05	0.40	45.3
TRD9238x12L	※★◎	12 (7.0~14.0)	0.82	9.84	5000	108.81	3.08	15.55	0.61	50.5
TRD9238x12M	※★◎	12 (7.0~14.0)	1.16	13.92	6000	130.15	3.68	22.24	0.88	55.4
TRD9238x12H	※★◎	12 (7.0~14.0)	1.60	19.20	7000	151.49	4.29	30.13	1.19	58.8
TRD9238x12VH	◎	12 (7.0~14.0)	2.30	27.60	8000	172.82	4.89	39.22	1.54	63.3
TRD9238x24D	◎	24 (15.0~27.0)	0.21	5.04	4000	87.48	2.47	10.05	0.40	45.3
TRD9238x24L	※★◎	24 (15.0~27.0)	0.41	9.84	5000	108.81	3.08	15.55	0.61	50.5
TRD9238x24M	※★◎	24 (15.0~27.0)	0.58	13.92	6000	130.15	3.68	22.24	0.88	55.4
TRD9238x24H	※★◎	24 (15.0~27.0)	0.80	19.20	7000	151.49	4.29	30.13	1.19	58.8
TRD9238x24VH	◎	24 (15.0~27.0)	1.15	27.60	8000	172.82	4.89	39.22	1.54	63.3
TRD9238x24SH	◎	24 (15.0~27.0)	1.36	32.64	8500	183.49	5.19	44.21	1.74	64.8
TRD9238x48D	※★◎	48 (35.0~57.0)	0.10	4.80	4000	87.48	2.47	10.05	0.40	45.3
TRD9238x48L	※★◎	48 (35.0~57.0)	0.20	9.60	5000	108.81	3.08	15.55	0.61	50.5
TRD9238x48M	※★◎	48 (35.0~57.0)	0.26	12.48	6000	130.15	3.68	22.24	0.88	55.4
TRD9238x48H	※★◎	48 (35.0~57.0)	0.40	19.20	7000	151.49	4.29	30.13	1.19	58.8
TRD9238x48VH	◎	48 (35.0~57.0)	0.58	27.84	8000	172.82	4.89	39.22	1.54	63.3
TRD9238x48SH	◎	48 (35.0~57.0)	0.68	32.64	8500	183.49	5.19	44.21	1.74	64.8

Optional Frames：

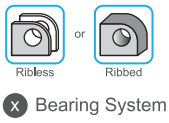

X Bearing System ※：Sleeve ★：WRB ◎：Ball

★如果您需要的轉速或電壓或功能不在這份清單上，請與我們業務聯繫 Please contact us, if the SPEC you need is not in the list.
★產品詳細數據及功能請參閱承認書 Please see the approval sheet for more information . ★產品規格變更不另行通知 Specifications are subject to change without notice.

DC Axial Fan

TRD9238 B SERIES 92X92X38mm

- Frame：Thermoplastic PBT UL94-V0
  外框材質：環保防火PBT
- Impeller：Thermoplastic PBT UL94-V0
  扇葉材質：環保防火PBT
- Bearing：※Sleeve・★WRB・◎Two Ball
  軸承：※含油・★WRB・◎滾珠軸承
- Unit Weight：238g
  風扇單體重量：238克

P&Q Curve | At Rated Voltage

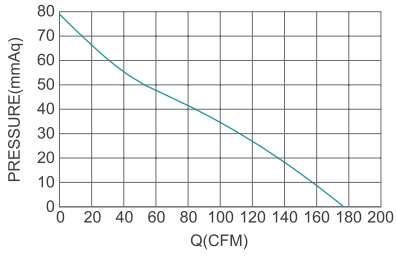

DIMENSIONS DRAWING | UNIT：mm

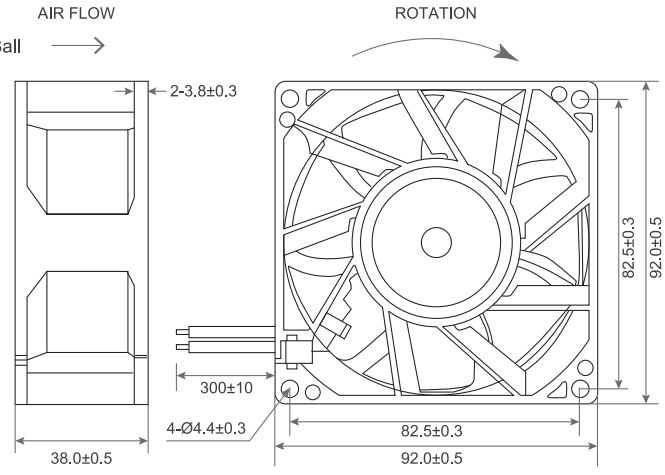

Model No.	Bearing Type	Voltage (VDC)	Current (A)	Power (W)	Speed (RPM)	Air Flow (CFM)	Air Flow (m^3/min)	Air Pressure (mmH₂O)	Air Pressure (Inch H₂O)	Noise (dBA)
TRD9238x24SH	※★◎	24 (15.0~27.0)	1.7	41.0	11000	175.95	4.46	78.61	3.09	66.9

DC Axial Fan

TRD9238 U SERIES 92X92X38mm

- Frame：Thermoplastic PBT UL94-V0
  外框材質：環保防火PBT
- Impeller：Thermoplastic PBT UL94-V0
  扇葉材質：環保防火PBT
- Bearing：※Sleeve・★WRB・◎Two Ball
  軸承：※含油・★WRB・◎滾珠軸承
- Unit Weight：238g
  風扇單體重量：238克

P&Q Curve | At Rated Voltage

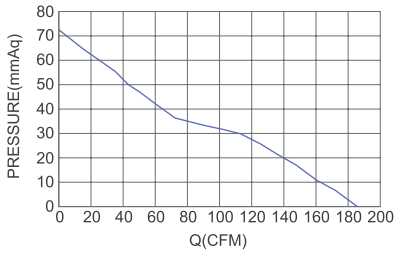

DIMENSIONS DRAWING | UNIT：mm

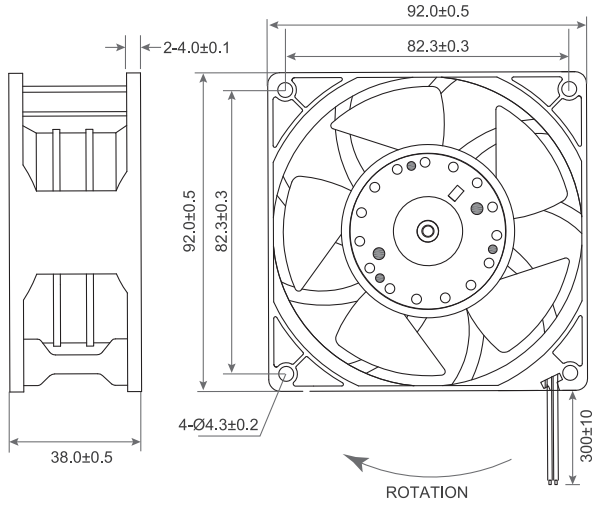

Model No.	Bearing Type	Voltage (VDC)	Current (A)	Power (W)	Speed (RPM)	Air Flow (CFM)	Air Flow (m^3/min)	Air Pressure (mmH₂O)	Air Pressure (Inch H₂O)	Noise (dBA)
TRD9238x12SH	※★◎	12 (7.5~13.5)	3.5	42.0	11000	184.2	5.22	71.9	2.83	70.5
TRD9238x24SH	※★◎	24 (18.0~26.5)	1.8	42.0	11000	184.2	5.22	71.9	2.83	70.5
TRD9238x48SH	※★◎	48 (36.0~54.0)	0.9	42.0	11000	184.2	5.22	71.9	2.83	70.5

x Bearing System ※：Sleeve ★：WRB ◎：Ball

★如果您需要的轉速或電壓或功能不在這份清單上，請與我們業務聯繫 Please contact us, if the SPEC you need is not in the list.

★產品詳細數據及功能請參閱承認書 Please see the approval sheet for more information . ★產品規格變更不另行通知 Specifications are subject to change without notice.

DC Axial Fan

TRD9238 UB SERIES Ø92X38mm

- Frame：Thermoplastic PBT UL94-V0
  外框材質：環保防火PBT
- Impeller：Thermoplastic PBT UL94-V0
  扇葉材質：環保防火PBT
- Bearing：◎Two Ball Bearing
  軸承：◎滾珠軸承
- Unit Weight：131g
  風扇單體重量：131克

P&Q Curve | At Rated Voltage

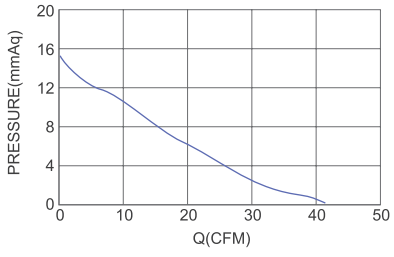

DIMENSIONS DRAWING | UNIT：mm

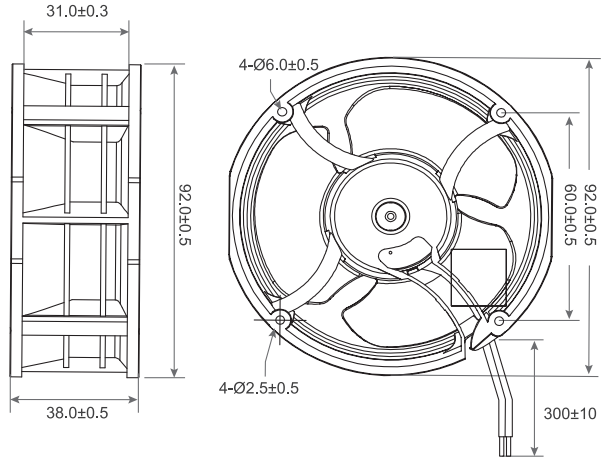

Model No.	Bearing Type	Voltage (VDC)	Current (A)	Power (W)	Speed (RPM)	Air Flow (CFM)	Air Flow (m^3/min)	Air Pressure (mmH₂O)	Air Pressure (Inch H₂O)	Noise (dBA)
TRD9238B12M	◎	12 (7.5~13.5)	0.17	2.0	5500	42.4	1.20	15.00	0.59	43.0
TRD9238B24H	◎	24 (7.5~13.5)	0.09	2.2	5500	42.4	1.20	15.00	0.59	43.0

DC Axial Fan

SRL10025 SERIES 100X100X25mm

- Frame：Thermoplastic PBT UL94-V0
  外框材質：環保防火PBT
- Impeller：Thermoplastic PBT UL94-V0
  扇葉材質：環保防火PBT
- Bearing：※Sleeve・★WRB・◎Two Ball
  軸承：※含油・★WRB・◎滾珠軸承
- Unit Weight：104.2g
  風扇單體重量：104.2克

P&Q Curve | At Rated Voltage

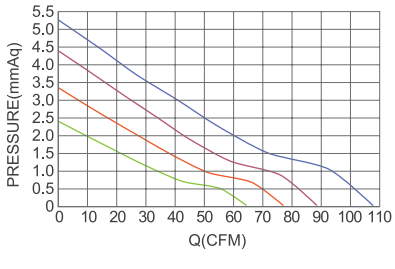

DIMENSIONS DRAWING | UNIT：mm

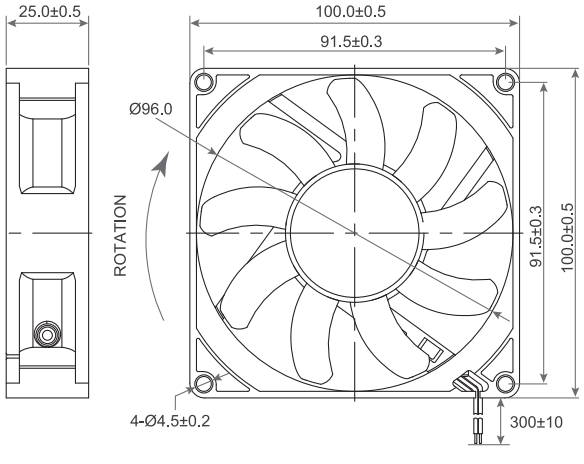

Model No.	Bearing Type	Voltage (VDC)	Current (A)	Power (W)	Speed (RPM)	Air Flow (CFM)	Air Flow (m^3/min)	Air Pressure (mmH₂O)	Air Pressure (Inch H₂O)	Noise (dBA)
SRLx1002512L	※★◎	12 (10.0~13.8)	0.25	3.00	2000	64.48	1.82	2.37	0.09	31.1
SRLx1002512M	※★◎	12 (7.0~13.8)	0.45	5.40	2400	77.15	2.18	3.32	0.13	35.7
SRLx1002512H	※★◎	12 (7.0~13.8)	0.55	6.60	2800	88.55	2.51	4.37	0.17	40.6
SRLx1002512HH	※★◎	12 (7.0~13.8)	0.70	8.40	3300	107.63	3.05	5.20	0.20	43.6

x Bearing System　※：Sleeve　★：WRB　◎：Ball

★如果您需要的轉速或電壓或功能不在這份清單上，請與我們業務聯繫　Please contact us, if the SPEC you need is not in the list.

★產品詳細數據及功能請參閱承認書　Please see the approval sheet for more information . ★產品規格變更不另行通知　Specifications are subject to change without notice.

DC Axial Fan

SRL12015 SERIES 120X120X15mm

- Frame：Thermoplastic PBT UL94-V0
  外框材質：環保防火PBT
- Impeller：Thermoplastic PBT UL94-V0
  扇葉材質：環保防火PBT
- Bearing：※Sleeve・★WRB・◎Two Ball
  軸承：※含油・★WRB・◎滾珠軸承
- Unit Weight：92g
  風扇單體重量：92克

P&Q Curve | At Rated Voltage

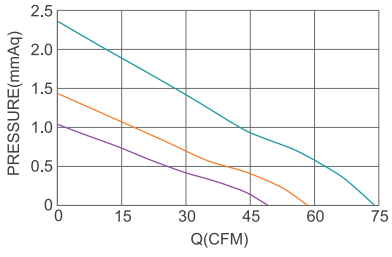

DIMENSIONS DRAWING | UNIT：mm

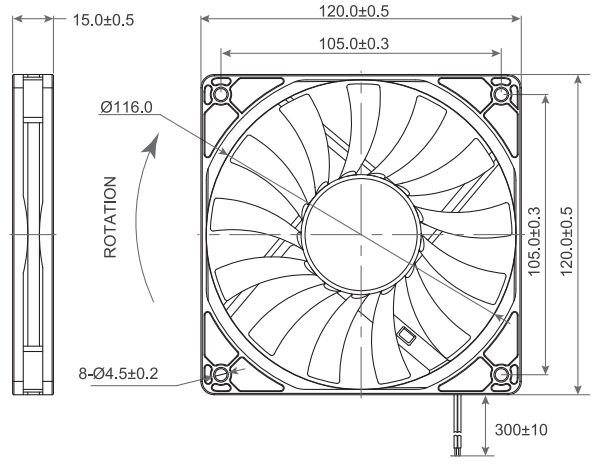

Model No.	Bearing Type	Voltage (VDC)	Current (A)	Power (W)	Speed (RPM)	Air Flow (CFM)	Air Flow (m^3/min)	Air Pressure (mmH_2O)	Air Pressure (Inch H_2O)	Noise (dBA)
SRLx1201512LB	※★◎	12 (6.0~13.8)	0.20	2.40	1500	48.96	1.39	1.05	0.04	30.5
SRLx1201512MB	※★◎	12 (6.0~13.8)	0.38	4.56	1800	58.30	1.65	1.43	0.06	36.0
SRLx1201512HB	※★◎	12 (6.0~13.8)	0.45	5.40	2100	73.83	2.09	2.36	0.09	40.5

DC Axial Fan

SRL12020 SERIES 120X120X20mm

- Frame：Thermoplastic PBT UL94-V0
  外框材質：環保防火PBT
- Impeller：Thermoplastic PBT UL94-V0
  扇葉材質：環保防火PBT
- Bearing：※Sleeve・★WRB・◎Two Ball
  軸承：※含油・★WRB・◎滾珠軸承
- Unit Weight：140g
  風扇單體重量：140克

P&Q Curve | At Rated Voltage

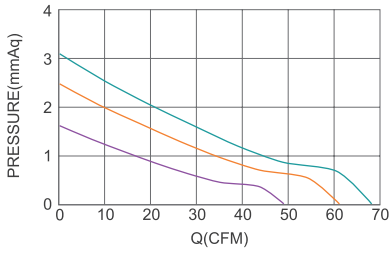

DIMENSIONS DRAWING | UNIT：mm

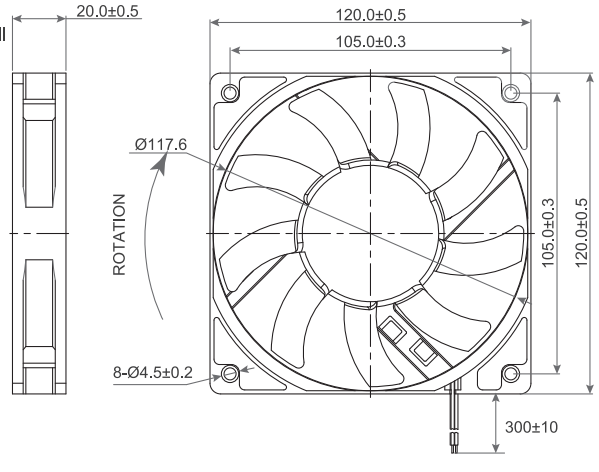

Model No.	Bearing Type	Voltage (VDC)	Current (A)	Power (W)	Speed (RPM)	Air Flow (CFM)	Air Flow (m^3/min)	Air Pressure (mmH_2O)	Air Pressure (Inch H_2O)	Noise (dBA)
SRLx1202012L	※★◎	12 (6.0~13.8)	0.25	3.00	1500	48.92	1.38	1.67	0.07	31.4
SRLx1202012M	※★◎	12 (6.0~13.8)	0.35	4.20	1800	60.90	1.72	2.43	0.10	36.5
SRLx1202012H	※★◎	12 (6.0~13.8)	0.45	5.40	2200	67.81	1.92	3.05	0.12	40.9

x Bearing System ※：Sleeve ★：WRB ◎：Ball

★如果您需要的轉速或電壓或功能不在這份清單上，請與我們業務聯繫 Please contact us, if the SPEC you need is not in the list.

★產品詳細數據及功能請參閱承認書 Please see the approval sheet for more information . ★產品規格變更不另行通知 Specifications are subject to change without notice.

DC Axial Fan

TRS12025 SERIES 120X120X25mm

DIMENSIONS DRAWING UNIT：mm

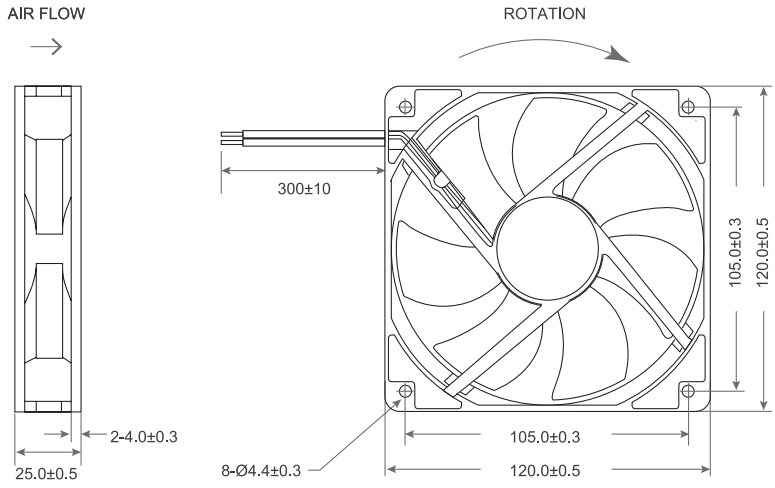

- Frame：Thermoplastic PBT UL94-V0
  外框材質：環保防火PBT
- Impeller：Thermoplastic PBT UL94-V0
  扇葉材質：環保防火PBT
- Bearing：※Sleeve・★WRB・◎Two Ball Bearing
  軸承：※含油・★WRB・◎滾珠軸承
- Unit Weight：125g
  風扇單體重量：125克

P&Q Curve At Rated Voltage

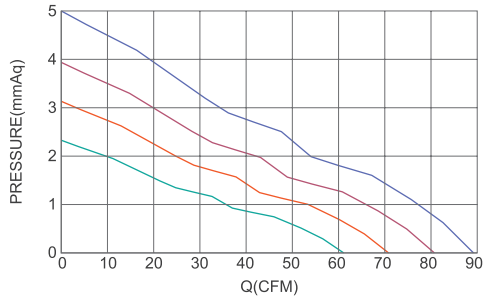

Model No.	Bearing Type	Voltage (VDC)	Current (A)	Power (W)	Speed (RPM)	Air Flow (CFM)	Air Flow (m^3/min)	Air Pressure (mmH_2O)	Air Pressure (Inch H_2O)	Noise (dBA)
TRS1225x12D	※★◎	12 (7.0~14.0)	0.12	1.44	1500	51.39	1.45	1.63	0.06	27.0
TRS1225x12L	※★◎	12 (7.0~14.0)	0.16	1.92	1800	61.03	1.73	2.30	0.09	32.2
TRS1225x12M	※★◎	12 (7.0~14.0)	0.23	2.76	2100	70.69	2.00	3.08	0.12	35.5
TRS1225x12H	※★◎	12 (7.0~14.0)	0.30	3.60	2400	80.31	2.27	3.98	0.16	39.0
TRS1225x12VH	※★◎	12 (7.0~14.0)	0.38	4.56	2700	89.94	2.54	5.00	0.20	42.3
TRS1225x24D	※★◎	24 (15.0~27.0)	0.06	1.44	1500	51.39	1.45	1.63	0.06	27.0
TRS1225x24L	※★◎	24 (15.0~27.0)	0.08	1.92	1800	61.03	1.73	2.30	0.09	32.2
TRS1225x24M	※★◎	24 (15.0~27.0)	0.12	2.88	2100	70.69	2.00	3.08	0.12	35.5
TRS1225x24H	※★◎	24 (15.0~27.0)	0.15	3.60	2400	80.31	2.27	3.98	0.16	39.0
TRS1225x24VH	※★◎	24 (15.0~27.0)	0.19	4.56	2700	89.94	2.54	5.00	0.20	42.3

Optional Frames：

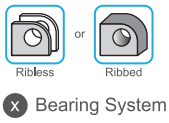

X Bearing System ※：Sleeve ★：WRB ◎：Ball

★如果您需要的轉速或電壓或功能不在這份清單上，請與我們業務聯繫 Please contact us, if the SPEC you need is not in the list.
★產品詳細數據及功能請參閱承認書 Please see the approval sheet for more information . ★產品規格變更不另行通知 Specifications are subject to change without notice.

DC Axial Fan

TRD12025 SERIES 120X120X25mm

DIMENSIONS DRAWING UNIT：mm

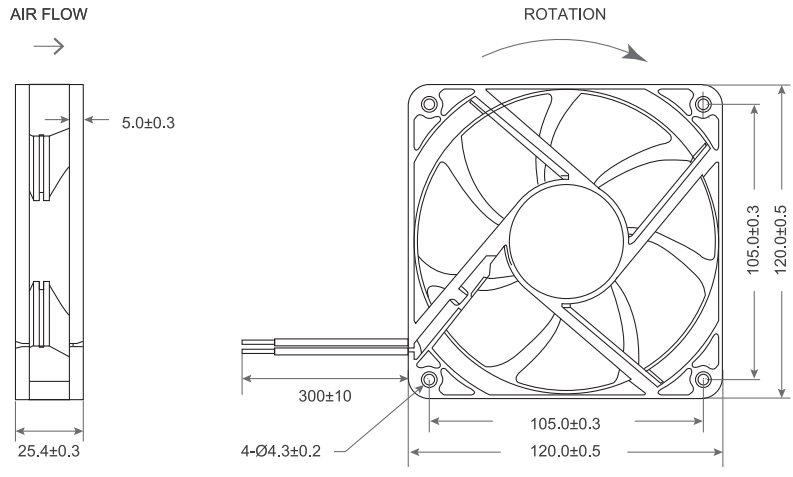

- Frame：Thermoplastic PBT UL94-V0
  外框材質：環保防火PBT
- Impeller：Thermoplastic PBT UL94-V0
  扇葉材質：環保防火PBT
- Bearing：※Sleeve・★WRB・◎Two Ball Bearing
  軸承：※含油・★WRB・◎滾珠軸承
- Unit Weight：125g
  風扇單體重量：125克

P&Q Curve At Rated Voltage

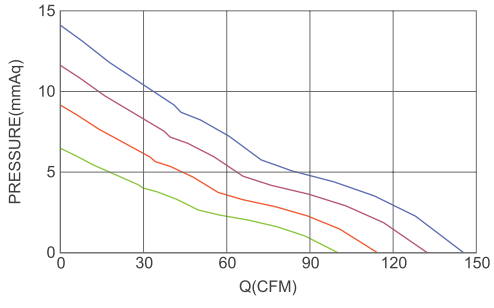

Model No.	Bearing Type	Voltage (VDC)	Current (A)	Power (W)	Speed (RPM)	Air Flow (CFM)	Air Flow (m^3/min)	Air Pressure (mmH_2O)	Air Pressure (Inch H_2O)	Noise (dBA)
TRD1225x12D	※★◎	12 (7.0~14.0)	0.28	3.36	3000	85.59	2.42	5.03	0.20	43.8
TRD1225x12L	※★◎	12 (7.0~14.0)	0.40	4.80	3500	99.85	2.83	6.85	0.27	48.2
TRD1225x12M	※★◎	12 (7.0~14.0)	0.62	7.44	4000	114.12	3.23	8.95	0.35	50.6
TRD1225x24D	※★◎	24 (15.0~27.0)	0.14	3.36	3000	85.59	2.42	5.03	0.20	43.8
TRD1225x24L	※★◎	24 (15.0~27.0)	0.20	4.80	3500	99.85	2.83	6.85	0.27	48.2
TRD1225x24M	※★◎	24 (15.0~27.0)	0.31	7.44	4000	114.12	3.23	8.95	0.35	50.6
TRD1225x24H	※★◎	24 (15.0~27.0)	0.46	11.04	4500	128.38	3.63	11.32	0.45	53.6
TRD1225x48L	※★◎	48 (35.0~57.0)	0.10	4.80	3500	99.85	2.83	6.85	0.27	43.8
TRD1225x48M	※★◎	48 (35.0~57.0)	0.16	7.68	4000	114.12	3.23	8.95	0.35	48.2
TRD1225x48H	※★◎	48 (35.0~57.0)	0.23	11.04	4500	128.38	3.63	11.32	0.45	50.6
TRD1225x48VH	※★◎	48 (35.0~57.0)	0.35	16.80	5000	142.64	4.04	13.98	0.55	53.6

Optional Frames：

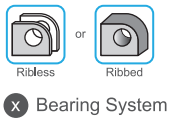

X Bearing System ※：Sleeve ★：WRB ◎：Ball

★如果您需要的轉速或電壓或功能不在這份清單上，請與我們業務聯繫 Please contact us, if the SPEC you need is not in the list.

★產品詳細數據及功能請參閱承認書 Please see the approval sheet for more information . ★產品規格變更不另行通知 Specifications are subject to change without notice.

DC Axial Fan

TRD12025 B SERIES 120X120X25mm

DIMENSIONS DRAWING UNIT：mm

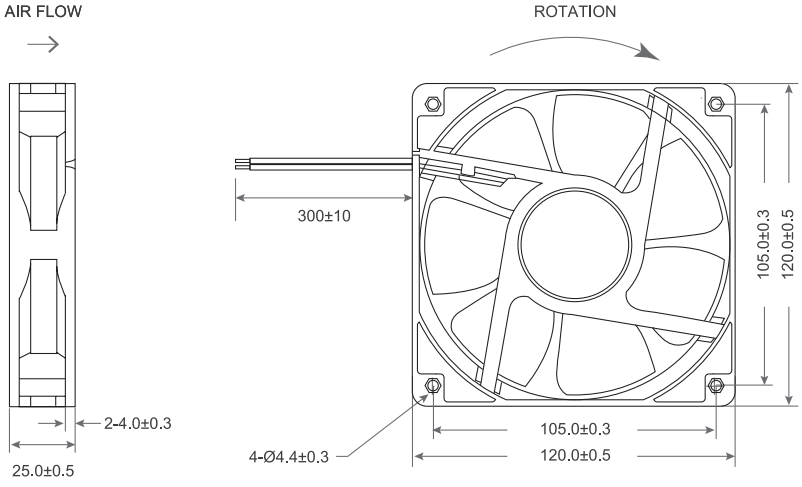

- Frame：Thermoplastic PBT UL94-V0
  外框材質：環保防火PBT
- Impeller：Thermoplastic PBT UL94-V0
  扇葉材質：環保防火PBT
- Bearing：※Sleeve・★WRB・◎Two Ball Bearing
  軸承：※含油・★WRB・◎滾珠軸承
- Unit Weight：125g
  風扇單體重量：125克

P&Q Curve At Rated Voltage

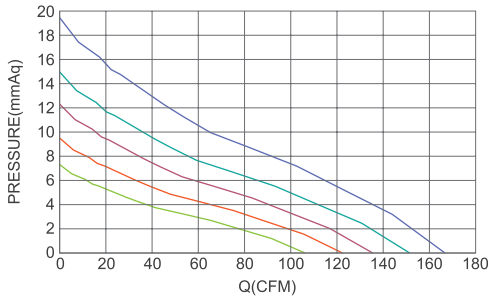

Model No.	Bearing Type	Voltage (VDC)	Current (A)	Power (W)	Speed (RPM)	Air Flow (CFM)	Air Flow (m^3/min)	Air Pressure (mmH₂O)	Air Pressure (Inch H₂O)	Noise (dBA)
TRD1225x12D	※★◎	12 (7.0~14.0)	0.32	3.84	3000	91.60	2.59	5.53	0.22	44.2
TRD1225x12L	※★◎	12 (7.0~14.0)	0.60	7.20	3500	106.38	3.01	7.45	0.29	47.2
TRD1225x12M	※★◎	12 (7.0~14.0)	0.76	9.12	4000	121.16	3.43	9.68	0.38	50.5
TRD1225x12H	※★◎	12 (7.0~14.0)	0.82	9.84	4500	135.93	3.85	12.19	0.48	53.8
TRD1225x12VH	※★◎	12 (7.0~14.0)	1.20	14.40	5000	150.71	4.26	14.99	0.59	56.6
TRD1225x12SH	※★◎	12 (7.0~14.0)	1.32	15.84	5500	165.48	4.68	18.07	0.71	59.0
TRD1225x24D	※★◎	24 (15.0~27.0)	0.16	3.84	3000	91.60	2.59	5.53	0.22	44.2
TRD1225x24L	※★◎	24 (15.0~27.0)	0.30	7.20	3500	106.38	3.01	7.45	0.29	47.2
TRD1225x24M	※★◎	24 (15.0~27.0)	0.38	9.12	4000	121.16	3.43	9.68	0.38	50.5
TRD1225x24H	※★◎	24 (15.0~27.0)	0.41	9.84	4500	135.93	3.85	12.19	0.48	53.8
TRD1225x24VH	※★◎	24 (15.0~27.0)	0.60	14.40	5000	150.71	4.26	14.99	0.59	56.6
TRD1225x24SH	※★◎	24 (15.0~27.0)	0.66	15.84	5500	165.48	4.68	18.07	0.71	59.0
TRD1225x48D	※★◎	48 (35.0~57.0)	0.08	3.84	3000	91.60	2.59	5.53	0.22	44.2
TRD1225x48L	※★◎	48 (35.0~57.0)	0.15	7.20	3500	106.38	3.01	7.45	0.29	47.2
TRD1225x48M	※★◎	48 (35.0~57.0)	0.19	9.12	4000	121.16	3.43	9.68	0.38	50.5
TRD1225x48H	※★◎	48 (35.0~57.0)	0.21	10.08	4500	135.93	3.85	12.19	0.48	53.8
TRD1225x48VH	※★◎	48 (35.0~57.0)	0.30	14.40	5000	150.71	4.26	14.99	0.59	56.6
TRD1225x48SH	※★◎	48 (35.0~57.0)	0.33	15.84	5500	165.48	4.68	18.07	0.71	59.0

x Bearing System ※：Sleeve ★：WRB ◎：Ball

★如果您需要的轉速或電壓或功能不在這份清單上，請與我們業務聯繫 Please contact us, if the SPEC you need is not in the list.

★產品詳細數據及功能請參閱承認書 Please see the approval sheet for more information . ★產品規格變更不另行通知 Specifications are subject to change without notice.

DC Axial Fan

TRS12025 U SERIES 120X120X25mm

DIMENSIONS DRAWING UNIT：mm

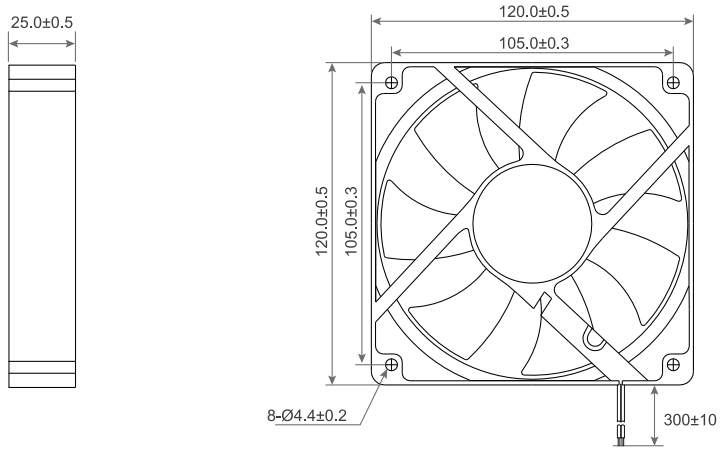

- Frame：Thermoplastic PBT UL94-V0
  外框材質：環保防火PBT
- Impeller：Thermoplastic PBT UL94-V0
  扇葉材質：環保防火PBT
- Bearing：※Sleeve・★WRB・◎Two Ball Bearing
  軸承：※含油・★WRB・◎滾珠軸承
- Unit Weight：150g
  風扇單體重量：150克

P&Q Curve At Rated Voltage

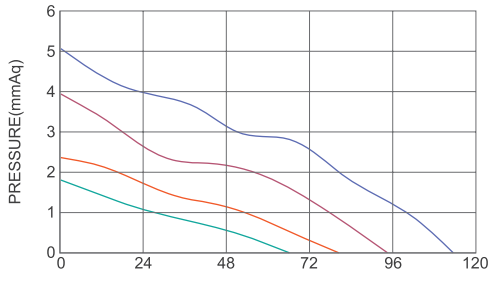

Model No.	Bearing Type	Voltage (VDC)	Current (A)	Power (W)	Speed (RPM)	Air Flow (CFM)	Air Flow (m^3/min)	Air Pressure (mmH_2O)	Air Pressure (Inch H_2O)	Noise (dBA)
TRS1225x12L	※★◎	12 (8.0~13.5)	0.18	2.16	1500	64.2	1.82	1.76	0.069	30.5
TRS1225x12M	※★◎	12 (8.0~13.5)	0.25	3.00	2000	76.6	2.17	2.43	0.096	36.5
TRS1225x12H	※★◎	12 (8.0~13.7)	0.31	3.72	2500	92.4	2.62	3.98	0.157	42.1
TRS1225x12VH	※★◎	12 (8.0~13.8)	0.45	5.40	3000	107.3	3.04	5.04	0.198	47.4
TRS1225x24L	※★◎	24 (18.0~26.5)	0.09	2.16	1500	64.2	1.82	1.76	0.069	30.5
TRS1225x24M	※★◎	24 (18.0~26.5)	0.13	3.00	2000	76.6	2.17	2.43	0.096	36.5
TRS1225x24H	※★◎	24 (18.0~26.5)	0.16	3.72	2500	92.4	2.62	3.98	0.157	42.1
TRS1225x24VH	※★◎	24 (18.0~26.5)	0.23	5.40	3000	107.0	3.04	5.04	0.198	47.4
TRS1225x48L	※★◎	48 (36.0~54.0)	0.05	2.16	1500	64.2	1.82	1.76	0.069	30.5
TRS1225x48M	※★◎	48 (36.0~54.0)	0.06	3.00	2000	76.6	2.17	2.43	0.096	36.5
TRS1225x48H	※★◎	48 (36.0~54.0)	0.08	3.72	2500	92.4	2.62	3.98	0.157	42.1
TRS1225x48VH	※★◎	48 (36.0~54.0)	0.11	5.40	3000	107.0	3.04	5.04	0.198	47.4

X Bearing System ※：Sleeve ★：WRB ◎：Ball

★如果您需要的轉速或電壓或功能不在這份清單上，請與我們業務聯繫 Please contact us, if the SPEC you need is not in the list.

★產品詳細數據及功能請參閱承認書 Please see the approval sheet for more information . ★產品規格變更不另行通知 Specifications are subject to change without notice.

DC Axial Fan

TRS12025 G SERIES 120X120X25mm(V7)

- Frame：Thermoplastic PBT UL94-V0
  外框材質：環保防火PBT
- Impeller：Thermoplastic PBT UL94-V0
  扇葉材質：環保防火PBT
- Bearing：Sleeve ・ Two Ball Bearing
  軸承：※含油 ◎滾珠軸承
- Unit Weight：153.0g
  風扇單體重量：153.0克

P&Q Curve At Rated Voltage

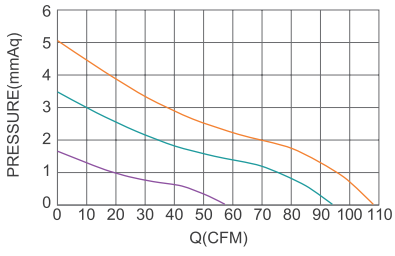

DIMENSIONS DRAWING UNIT：mm

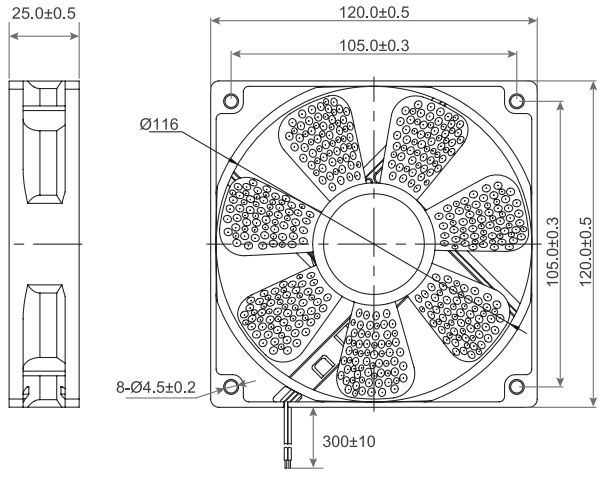

Model No.	Bearing Type	Voltage (VDC)	Current (A)	Power (W)	Speed (RPM)	Air Flow (CFM)	Air Flow (m^3/min)	Air Pressure (mmH2O)	Air Pressure (Inch H2O)	Noise (dBA)
TRS1225x12L	※◎	12 (7.0~13.8)	0.30	3.60	1500	57.23	1.62	1.64	0.06	25.6
TRS1225x12M	※◎	12 (6.0~13.8)	0.30	3.60	2000	93.96	2.66	3.47	0.14	34.3
TRS1225x12H	※◎	12 (6.0~13.8)	0.38	4.56	2400	108.17	3.06	5.05	0.20	40.9

DC Axial Fan

TRS12025 GB SERIES 120X120X25mm(V9)

- Frame：Thermoplastic PBT UL94-V0
  外框材質：環保防火PBT
- Impeller：Thermoplastic PBT UL94-V0
  扇葉材質：環保防火PBT
- Bearing：Sleeve・Two Ball Bearing
  軸承：※含油軸承 ◎滾珠軸承
- Unit Weight：151.0g
  風扇單體重量：151.0克

P&Q Curve At Rated Voltage

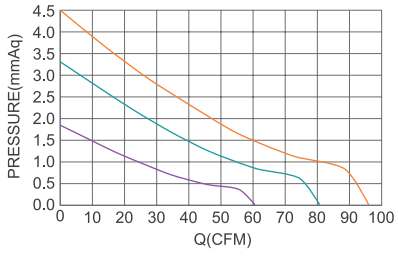

DIMENSIONS DRAWING UNIT：mm

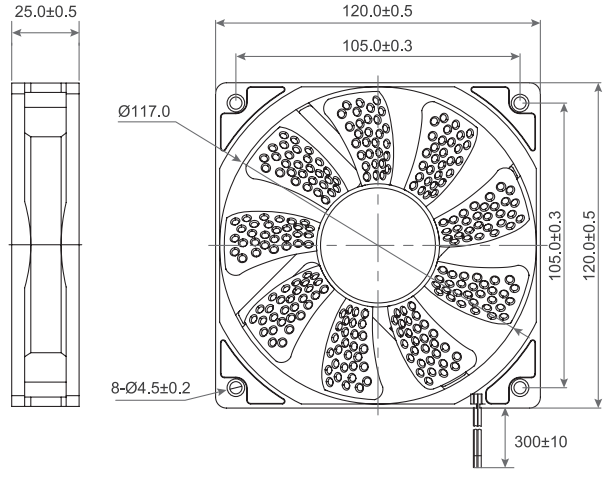

Model No.	Bearing Type	Voltage (VDC)	Current (A)	Power (W)	Speed (RPM)	Air Flow (CFM)	Air Flow (m^3/min)	Air Pressure (mmH2O)	Air Pressure (Inch H2O)	Noise (dBA)
TRS1225x12L	※◎	12 (7.0~13.8)	0.30	3.60	1500	60.59	1.71	1.86	0.07	30.2
TRS1225x12M	※◎	12 (7.0~13.8)	0.30	3.60	2000	80.79	2.29	3.30	0.13	39.0
TRS1225x12H	※◎	12 (7.0~13.8)	0.38	4.56	2400	96.04	2.72	4.50	0.18	41.6

(X) Bearing System ※：Sleeve ★：WRB ◎：Ball

★如果您需要的轉速或電壓或功能不在這份清單上，請與我們業務聯繫 Please contact us, if the SPEC you need is not in the list.

★產品詳細數據及功能請參閱承認書 Please see the approval sheet for more information . ★產品規格變更不另行通知 Specifications are subject to change without notice.

DC Axial Fan

SRL12025 SERIES 120X120X25mm

DIMENSIONS DRAWING UNIT：mm

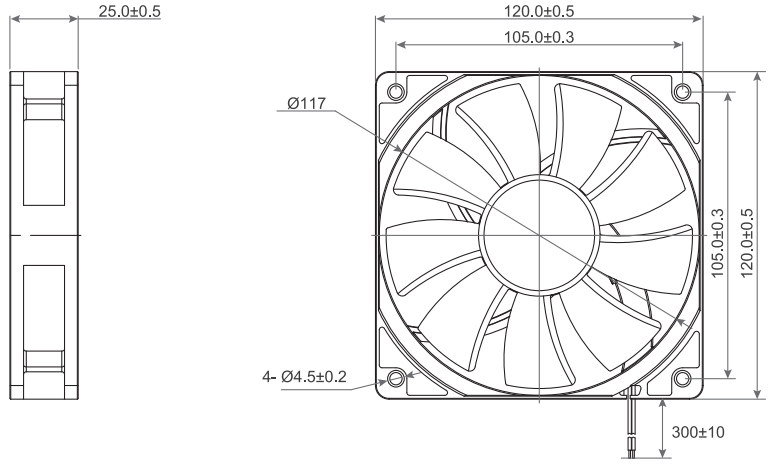

- Frame：Thermoplastic PBT UL94-V0
  外框材質：環保防火PBT
- Impeller：Thermoplastic PBT UL94-V0
  扇葉材質：環保防火PBT
- Bearing：※Sleeve・★WRB・◎Two Ball Bearing
  軸承：※含油・★WRB・◎滾珠軸承
- Unit Weight：134g
  風扇單體重量：134克

P&Q Curve At Rated Voltage

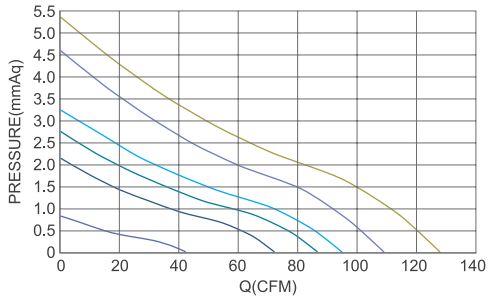

Model No.	Bearing Type	Voltage (VDC)	Current (A)	Power (W)	Speed (RPM)	Air Flow (CFM)	Air Flow (m^3/min)	Air Pressure (mmH_2O)	Air Pressure (Inch H_2O)	Noise (dBA)
SRLx1202512SLN	※★◎	12(10.0~13.8)	0.18	2.16	1000	42.33	1.20	0.83	0.03	15.2
SRLx1202512ELN	※★◎	12(6.0~13.8)	0.18	2.16	1600	72.67	2.06	2.14	0.08	29.1
SRLx1202512LLN	※★◎	12(6.0~13.8)	0.20	2.40	1800	87.19	2.47	2.75	0.11	33.0
SRLx1202512LN	※★◎	12(6.0~13.8)	0.30	3.60	2000	95.49	2.70	3.27	0.13	35.5
SRLx1202512MN	※★◎	12(6.0~13.8)	0.55	6.60	2400	109.44	3.10	4.59	0.18	41.2
SRLx1202512HN	※★◎	12(6.0~13.8)	0.65	7.80	2800	128.40	3.63	5.33	0.21	44.9

X Bearing System ※：Sleeve ★：WRB ◎：Ball

★如果您需要的轉速或電壓或功能不在這份清單上，請與我們業務聯繫 Please contact us, if the SPEC you need is not in the list.

★產品詳細數據及功能請參閱承認書 Please see the approval sheet for more information . ★產品規格變更不另行通知 Specifications are subject to change without notice.

DC Axial Fan

TRS12032 SERIES 120X120X32mm

DIMENSIONS DRAWING UNIT：mm

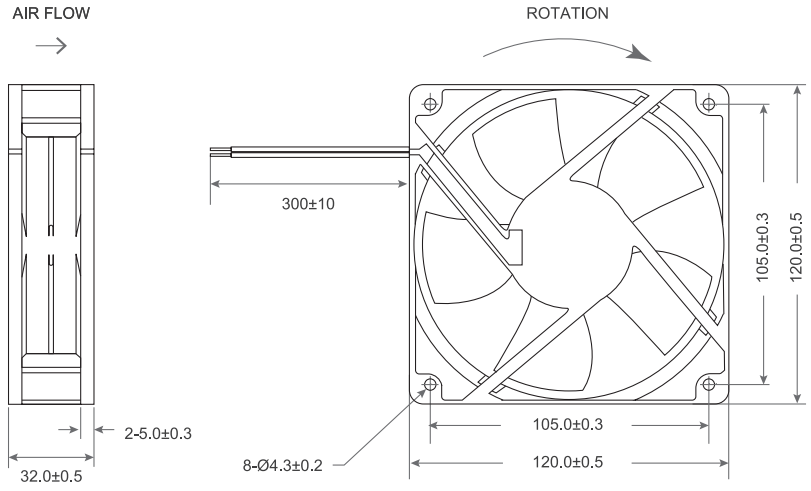

- ●Frame：Thermoplastic PBT UL94-V0
  外框材質：環保防火PBT
- ●Impeller：Thermoplastic PBT UL94-V0
  扇葉材質：環保防火PBT
- ●Bearing：※Sleeve・★WRB・◎Two Ball Bearing
  軸承：※含油・★WRB・◎滾珠軸承
- ●Unit Weight：220g
  風扇單體重量：220克

P&Q Curve At Rated Voltage

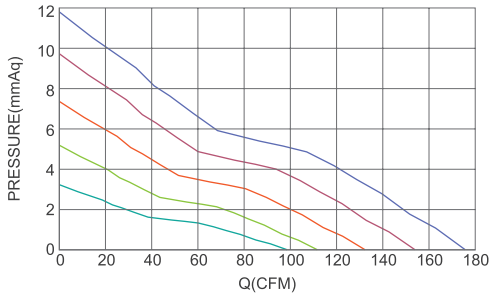

Model No.	Bearing Type	Voltage (VDC)	Current (A)	Power (W)	Speed (RPM)	Air Flow (CFM)	Air Flow (m^3/min)	Air Pressure (mmH2O)	Air Pressure (Inch H2O)	Noise (dBA)
TRS1232x12D	※★◎	12 (7.0~14.0)	0.14	1.68	2000	89.28	2.53	3.36	0.13	37.0
TRS1232x12L	※★◎	12 (7.0~14.0)	0.32	3.84	2500	110.54	3.13	5.15	0.20	42.6
TRS1232x12M	※★◎	12 (7.0~14.0)	0.76	9.12	3000	131.80	3.73	7.32	0.29	48.1
TRS1232x12H	※★◎	12 (7.0~14.0)	0.90	10.80	3500	153.06	4.33	9.88	0.39	51.0
TRS1232x12VH	※★◎	12 (7.0~14.0)	1.02	12.24	4000	174.32	4.93	11.81	0.46	54.5
TRS1232x24D	※★◎	24 (15.0~27.0)	0.07	1.68	2000	89.28	2.53	3.36	0.13	37.0
TRS1232x24L	※★◎	24 (15.0~27.0)	0.16	3.84	2500	110.54	3.13	5.15	0.20	42.6
TRS1232x24M	※★◎	24 (15.0~27.0)	0.38	9.12	3000	131.80	3.73	7.32	0.29	48.1
TRS1232x24H	※★◎	24 (15.0~27.0)	0.45	10.80	3500	153.06	4.33	9.88	0.39	51.0
TRS1232x24VH	※★◎	24 (15.0~27.0)	0.50	12.00	4000	174.32	4.93	11.81	0.46	54.5
TRS1232x48D	※★◎	48 (35.0~57.0)	0.03	1.44	2000	89.28	2.53	3.36	0.13	37.0
TRS1232x48L	※★◎	48 (35.0~57.0)	0.08	3.84	2500	110.54	3.13	5.15	0.20	42.6
TRS1232x48M	※★◎	48 (35.0~57.0)	0.19	9.12	3000	131.80	3.73	7.32	0.29	48.1
TRS1232x48H	※★◎	48 (35.0~57.0)	0.22	10.56	3500	153.06	4.33	9.88	0.39	51.0
TRS1232x48VH	※★◎	48 (35.0~57.0)	0.25	12.00	4000	174.32	4.93	11.81	0.46	54.5

(x) Bearing System ※：Sleeve ★：WRB ◎：Ball

★如果您需要的轉速或電壓或功能不在這份清單上，請與我們業務聯繫 Please contact us, if the SPEC you need is not in the list.

★產品詳細數據及功能請參閱承認書 Please see the approval sheet for more information . ★產品規格變更不另行通知 Specifications are subject to change without notice.

DC Axial Fan

TRS12038 SERIES 120X120X38mm

DIMENSIONS DRAWING UNIT：mm

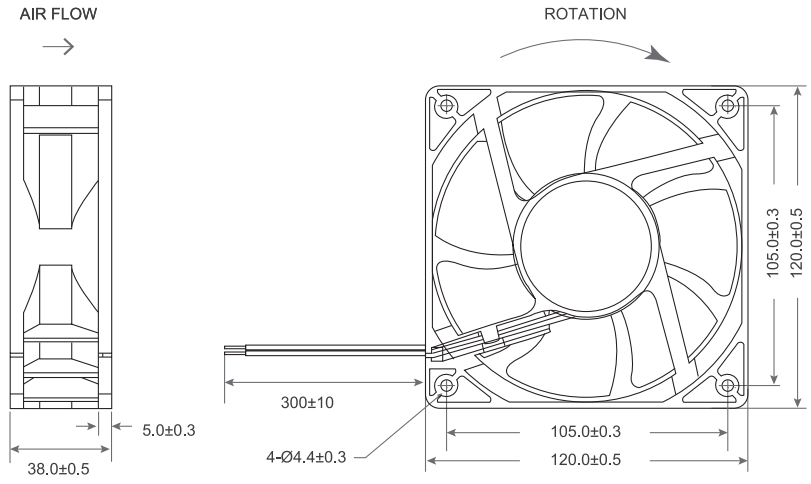

- Frame：Thermoplastic PBT UL94-V0
  外框材質：環保防火PBT
- Impeller：Thermoplastic PBT UL94-V0
  扇葉材質：環保防火PBT
- Bearing：※Sleeve・★WRB・◎Two Ball Bearing
  軸承：※含油・★WRB・◎滾珠軸承
- Unit Weight：280g
  風扇單體重量：280克

P&Q Curve At Rated Voltage

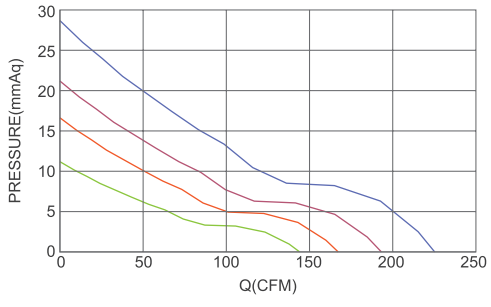

Model No.	Bearing Type	Voltage (VDC)	Current (A)	Power (W)	Speed (RPM)	Air Flow (CFM)	Air Flow (m^3/min)	Air Pressure (mmH_2O)	Air Pressure (Inch H_2O)	Noise (dBA)
TRS1238x12D	※★◎	12 (7.0~14.0)	0.50	6.00	2600	103.03	2.92	6.11	0.24	41.7
TRS1238x12L	※★◎	12 (7.0~14.0)	0.66	7.92	3200	126.93	3.59	9.25	0.36	47.8
TRS1238x12M	※★◎	12 (7.0~14.0)	0.98	11.76	3600	142.80	4.04	11.71	0.46	50.2
TRS1238x12H	※★◎	12 (7.0~14.0)	1.22	14.64	4200	166.60	4.71	15.93	0.63	55.1
TRS1238x12VH	◎	12 (7.0~14.0)	1.60	19.20	4800	190.40	5.39	20.82	0.82	59.2
TRS1238x12SH	◎	12 (7.0~14.0)	2.60	31.20	5600	222.13	6.29	28.34	1.12	64.8
TRS1238x24D	※★◎	24 (15.0~27.0)	0.25	6.00	2600	103.03	2.92	6.11	0.24	41.7
TRS1238x24L	※★◎	24 (15.0~27.0)	0.33	7.92	3200	126.93	3.59	9.25	0.36	47.8
TRS1238x24M	※★◎	24 (15.0~27.0)	0.49	11.76	3600	142.80	4.04	11.71	0.46	50.2
TRS1238x24H	※★◎	24 (15.0~27.0)	0.61	14.64	4200	166.60	4.71	15.93	0.63	55.1
TRS1238x24VH	◎	24 (15.0~27.0)	0.80	19.20	4800	190.40	5.39	20.82	0.82	59.2
TRS1238x24SH	◎	24 (15.0~27.0)	1.30	31.20	5600	222.13	6.29	28.34	1.12	64.8
TRS1238x48D	※★◎	48 (35.0~57.0)	0.12	5.76	2600	103.03	2.92	6.11	0.24	41.7
TRS1238x48L	※★◎	48 (35.0~57.0)	0.16	7.68	3200	126.93	3.59	9.25	0.36	47.8
TRS1238x48M	※★◎	48 (35.0~57.0)	0.25	12.00	3600	142.80	4.04	11.71	0.46	50.2
TRS1238x48H	※★◎	48 (35.0~57.0)	0.30	14.40	4200	166.60	4.71	15.93	0.63	55.1
TRS1238x48VH	◎	48 (35.0~57.0)	0.40	19.20	4800	190.40	5.39	20.82	0.82	59.2
TRS1238x48SH	◎	48 (35.0~57.0)	0.65	31.20	5600	222.13	6.29	28.34	1.12	64.8

(x) Bearing System ※：Sleeve ★：WRB ◎：Ball

★如果您需要的轉速或電壓或功能不在這份清單上，請與我們業務聯繫 Please contact us, if the SPEC you need is not in the list.

★產品詳細數據及功能請參閱承認書 Please see the approval sheet for more information . ★產品規格變更不另行通知 Specifications are subject to change without notice.

DC Axial Fan

TRD12038 SERIES 120X120X38mm

DIMENSIONS DRAWING UNIT：mm

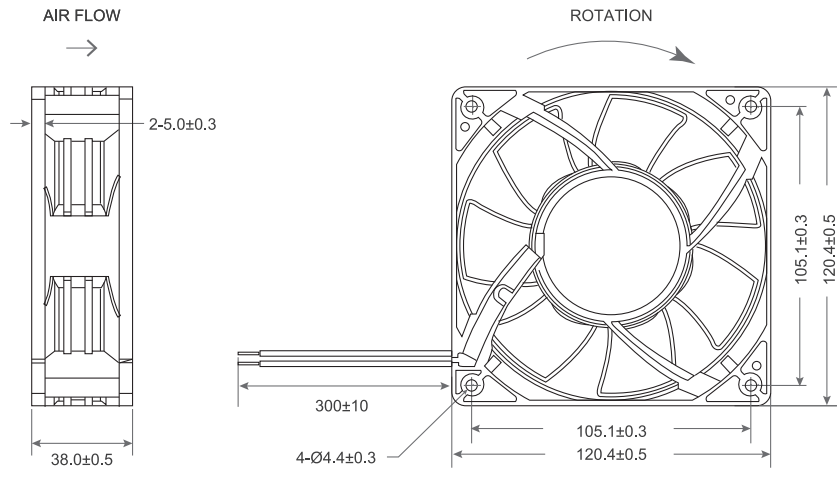

- Frame：Thermoplastic PBT UL94-V0
  外框材質：環保防火PBT
- Impeller：Thermoplastic PBT UL94-V0
  扇葉材質：環保防火PBT
- Bearing：※Sleeve・★WRB・◎Two Ball Bearing
  軸承：※含油・★WRB・◎滾珠軸承
- Unit Weight：380g
  風扇單體重量：380克

P&Q Curve At Rated Voltage

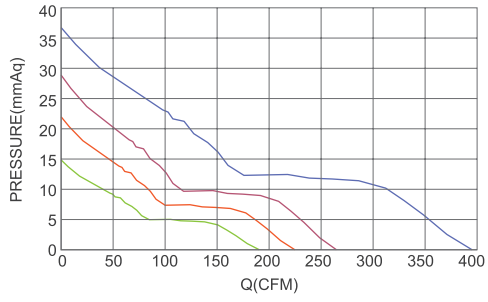

Model No.	Bearing Type	Voltage (VDC)	Current (A)	Power (W)	Speed (RPM)	Air Flow (CFM)	Air Flow (m^3/min)	Air Pressure (mmH2O)	Air Pressure (Inch H2O)	Noise (dBA)
TRD1238x12L	※★◎	12 (7.0~14.0)	0.43	5.16	3000	150.92	4.27	9.66	0.38	39.5
TRD1238x12M	※★◎	12 (7.0~14.0)	1.00	12.00	3700	186.13	5.27	14.69	0.58	46.3
TRD1238x12H	※★◎	12 (7.0~14.0)	1.50	18.00	4500	226.37	6.40	21.74	0.86	49.6
TRD1238x12VH	◎	12 (7.0~14.0)	2.50	30.00	5200	261.59	7.40	29.02	1.14	56.7
TRD1238x24L	※★◎	24 (15.0~27.0)	0.22	5.28	3000	150.92	4.27	9.66	0.38	39.5
TRD1238x24M	※★◎	24 (15.0~27.0)	0.50	12.00	3700	186.13	5.27	14.69	0.58	46.3
TRD1238x24H	※★◎	24 (15.0~27.0)	0.75	18.00	4500	226.37	6.40	21.74	0.86	49.6
TRD1238x24VH	◎	24 (15.0~27.0)	1.40	33.60	5200	261.59	7.40	29.02	1.14	56.7
TRD1238x24SH	◎	24 (15.0~27.0)	1.95	46.80	5500	391.77	8.25	36.11	1.42	62.0
TRD1238x48L	※★◎	48 (35.0~57.0)	0.11	5.28	3000	150.92	4.27	9.66	0.38	39.5
TRD1238x48M	※★◎	48 (35.0~57.0)	0.25	12.00	3700	186.13	5.27	14.69	0.58	46.3
TRD1238x48H	※★◎	48 (35.0~57.0)	0.38	18.00	4500	226.37	6.40	21.74	0.86	49.6
TRD1238x48VH	◎	48 (35.0~57.0)	0.70	33.60	5200	261.59	7.40	29.02	1.14	56.7
TRD1238x48SH	◎	48 (35.0~57.0)	0.97	46.80	5500	391.77	8.25	36.11	1.42	62.0

Optional Frames：

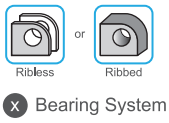

X Bearing System ※：Sleeve ★：WRB ◎：Ball

★如果您需要的轉速或電壓或功能不在這份清單上，請與我們業務聯繫 Please contact us, if the SPEC you need is not in the list.

★產品詳細數據及功能請參閱承認書 Please see the approval sheet for more information . ★產品規格變更不另行通知 Specifications are subject to change without notice.

DC Axial Fan

TRD12038 B SERIES 120X120X38mm

DIMENSIONS DRAWING UNIT：mm

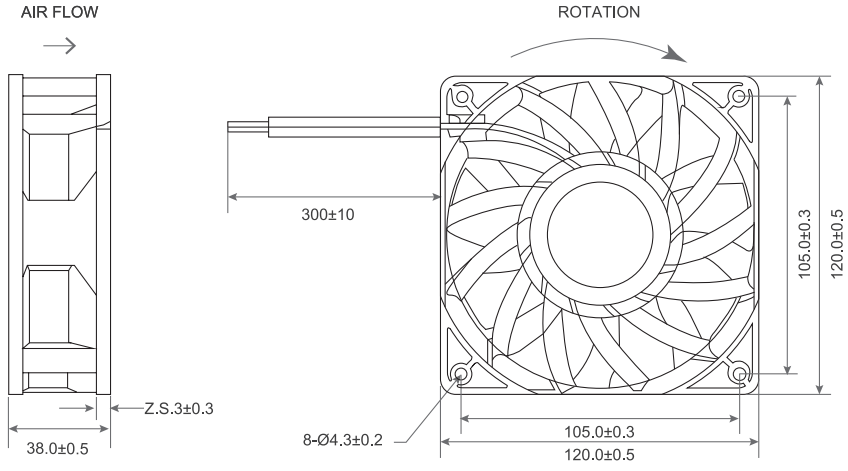

- Frame：Thermoplastic PBT UL94-V0
  外框材質：環保防火PBT
- Impeller：Thermoplastic PBT UL94-V0
  扇葉材質：環保防火PBT
- Bearing：※Sleeve・★WRB・◎Two Ball Bearing
  軸承：※含油・★WRB・◎滾珠軸承
- Unit Weight：380g
  風扇單體重量：380克

P&Q Curve At Rated Voltage

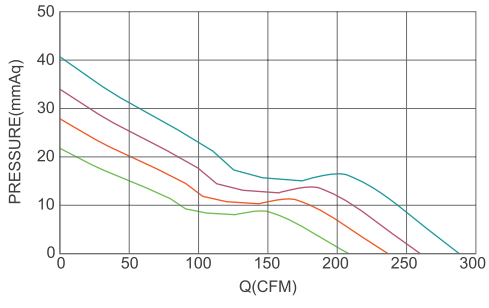

Model No.	Bearing Type	Voltage (VDC)	Current (A)	Power (W)	Speed (RPM)	Air Flow (CFM)	Air Flow (m^3/min)	Air Pressure (mmH_2O)	Air Pressure (Inch H_2O)	Noise (dBA)
TRD1238x12D	※★◎	12 (7.0~14.0)	0.86	10.32	3000	158.12	4.47	12.36	0.49	54.3
TRD1238x12L	※★◎	12 (7.0~14.0)	1.30	15.60	3500	183.60	5.20	16.66	0.66	58.5
TRD1238x12M	※★◎	12 (7.0~14.0)	1.86	22.32	4000	209.11	5.92	21.53	0.85	61.7
TRD1238x12H	※★◎	12 (7.0~14.0)	2.60	31.20	4500	234.65	6.64	27.20	1.07	64.6
TRD1238x24D	※★◎	24 (15.0~27.0)	0.43	10.32	3000	158.12	4.47	12.36	0.49	54.3
TRD1238x24L	※★◎	24 (15.0~27.0)	0.65	15.60	3500	183.60	5.20	16.66	0.66	58.5
TRD1238x24M	※★◎	24 (15.0~27.0)	0.93	22.32	4000	209.11	5.92	21.53	0.85	61.7
TRD1238x24H	※★◎	24 (15.0~27.0)	1.30	31.20	4500	234.65	6.64	27.20	1.07	64.6
TRD1238x24VH	◎	24 (15.0~27.0)	1.90	45.60	5000	260.30	7.37	33.42	1.32	67.9
TRD1238x48D	※★◎	48 (35.0~57.0)	0.21	10.08	3000	158.12	4.47	12.36	0.49	54.3
TRD1238x48L	※★◎	48 (35.0~57.0)	0.32	15.36	3500	183.60	5.20	16.66	0.66	58.5
TRD1238x48M	※★◎	48 (35.0~57.0)	0.46	22.08	4000	209.11	5.92	21.53	0.85	61.7
TRD1238x48H	※★◎	48 (35.0~57.0)	0.65	31.20	4500	234.65	6.64	27.20	1.07	64.6
TRD1238x48VH	◎	48 (35.0~57.0)	0.95	45.60	5000	260.30	7.37	33.42	1.32	67.9
TRD1238x48SH	◎	48 (35.0~57.0)	1.16	55.68	5500	285.69	8.09	40.24	1.58	71.2

(x) Bearing System ※：Sleeve ★：WRB ◎：Ball

★如果您需要的轉速或電壓或功能不在這份清單上，請與我們業務聯繫 Please contact us, if the SPEC you need is not in the list.

★產品詳細數據及功能請參閱承認書 Please see the approval sheet for more information . ★產品規格變更不另行通知 Specifications are subject to change without notice.

DC Axial Fan

TRD12038 U SERIES 120X120X38mm

DIMENSIONS DRAWING UNIT：mm

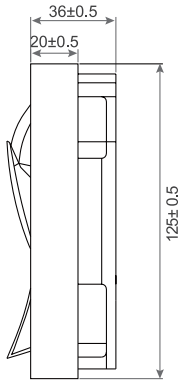

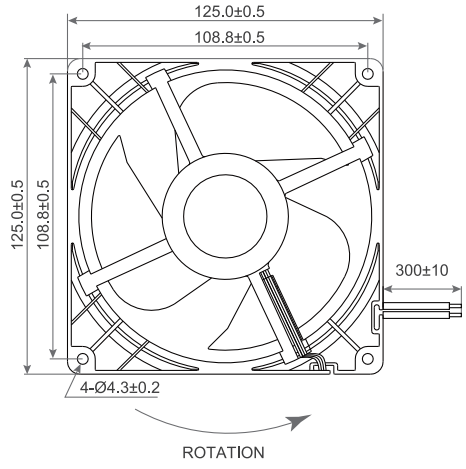

P&Q Curve At Rated Voltage

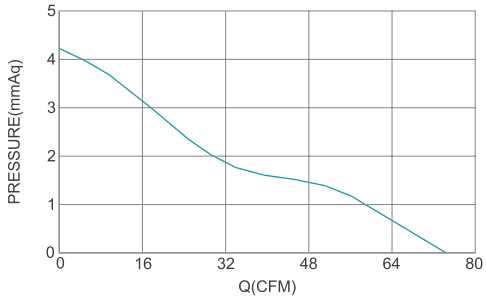

- Frame：Thermoplastic PBT UL94-V0
  外框材質：環保防火PBT
- Impeller：Thermoplastic PBT UL94-V0
  扇葉材質：環保防火PBT
- Bearing：※Sleeve・★WRB・◎Two Ball Bearing
  軸承：※含油・★WRB・◎滾珠軸承
- Unit Weight：228g
  風扇單體重量：228克

Model No.	Bearing Type	Voltage (VDC)	Current (A)	Power (W)	Speed (RPM)	Air Flow (CFM)	Air Flow (m^3/min)	Air Pressure (mmH_2O)	Air Pressure (Inch H_2O)	Noise (dBA)
TRD1238x12L	※★◎	12 (8.0~13.7)	0.11	1.32	2200	74.29	2.102	4.22	0.166	35.9

(X) Bearing System ※：Sleeve ★：WRB ◎：Ball

★如果您需要的轉速或電壓或功能不在這份清單上，請與我們業務聯繫 Please contact us, if the SPEC you need is not in the list.

★產品詳細數據及功能請參閱承認書 Please see the approval sheet for more information . ★產品規格變更不另行通知 Specifications are subject to change without notice.

DC Axial Fan

TRD12038 UB SERIES 120X120X38mm

DIMENSIONS DRAWING UNIT：mm

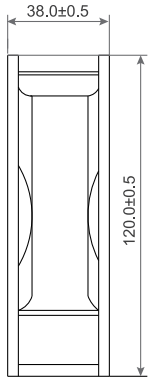

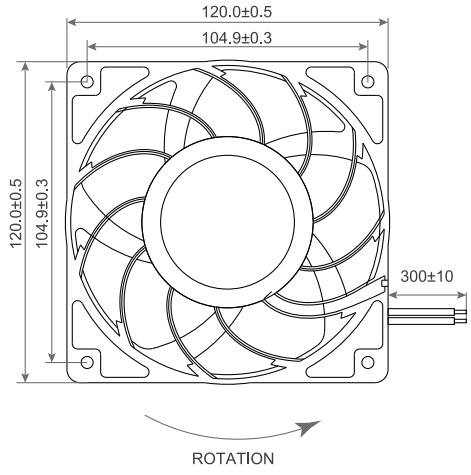

P&Q Curve At Rated Voltage

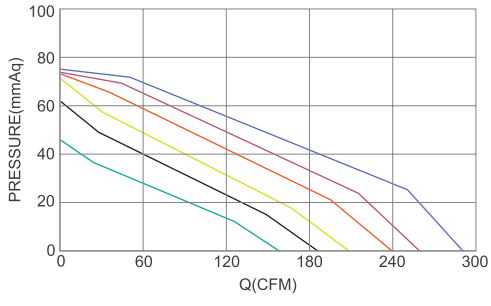

- Frame：Thermoplastic PBT UL94-V0
  外框材質：環保防火PBT
- Impeller：Thermoplastic PBT UL94-V0
  扇葉材質：環保防火PBT
- Bearing：※Sleeve・★WRB・◎Two Ball Bearing
  軸承：※含油・★WRB・◎滾珠軸承
- Unit Weight：445g
  風扇單體重量：445克

Model No.	Bearing Type	Voltage (VDC)	Current (A)	Power (W)	Speed (RPM)	Air Flow (CFM)	Air Flow (m^3/min)	Air Pressure (mmH2O)	Air Pressure (Inch H2O)	Noise (dBA)
TRD1238x12D	※◎★	12 (7.5~13.5)	1.5	18	6000	157.6	4.46	45.5	1.79	60.8
TRD1238x12L	※◎★	12 (7.5~13.5)	2.0	24	7000	185.6	5.25	61.5	2.42	64.8
TRD1238x12M	※◎★	12 (7.5~13.5)	2.8	34	8000	208.0	5.89	70.9	2.79	65.5
TRD1238x12H	※◎★	12 (7.5~13.5)	4.0	48	9000	239.2	6.77	71.9	2.83	70.8
TRD1238x12VH	※◎★	12 (7.5~13.5)	4.8	58	10000	259.2	7.34	72.6	2.86	73.4
TRD1238x12SH	※◎★	12 (7.5~13.5)	6.0	72	11000	289.2	8.18	73.1	2.88	75.3
TRD1238x24D	※◎★	24 (18.0~26.5)	0.8	18	6000	157.6	4.46	45.5	1.79	60.8
TRD1238x24L	※◎★	24 (18.0~26.5)	1.0	24	7000	185.6	5.25	61.5	2.42	64.8
TRD1238x24M	※◎★	24 (18.0~26.5)	1.4	34	8000	208.0	5.89	70.9	2.79	65.5
TRD1238x24H	※◎★	24 (18.0~26.5)	2.0	48	9000	239.2	6.77	71.9	2.83	70.8
TRD1238x24VH	※◎★	24 (18.0~26.5)	2.4	58	10000	259.2	7.34	72.6	2.86	73.4
TRD1238x24SH	※◎★	24 (18.0~26.5)	3.0	72	11000	289.2	8.18	73.1	2.88	75.3
TRD1238x48D	※◎★	48 (36.0~54.0)	0.4	18	6000	157.6	4.46	45.5	1.79	60.8
TRD1238x48L	※◎★	48 (36.0~54.0)	0.5	24	7000	185.6	5.25	61.5	2.42	64.8
TRD1238x48M	※◎★	48 (36.0~54.0)	0.7	34	8000	208.0	5.89	70.9	2.79	65.5
TRD1238x48H	※◎★	48 (36.0~54.0)	1.0	48	9000	239.2	6.77	71.9	2.83	70.8
TRD1238x48VH	※◎★	48 (36.0~54.0)	1.2	58	10000	259.2	7.34	72.6	2.86	73.4
TRD1238x48SH	※◎★	48 (36.0~54.0)	1.5	72	11000	289.2	8.18	73.1	2.88	75.3

X Bearing System ※：Sleeve ★：WRB ◎：Ball

★如果您需要的轉速或電壓或功能不在這份清單上，請與我們業務聯繫 Please contact us, if the SPEC you need is not in the list.

★產品詳細數據及功能請參閱承認書 Please see the approval sheet for more information . ★產品規格變更不另行通知 Specifications are subject to change without notice.

DC Axial Fan

TRY12038 SERIES 120X120X38mm

DIMENSIONS DRAWING UNIT：mm

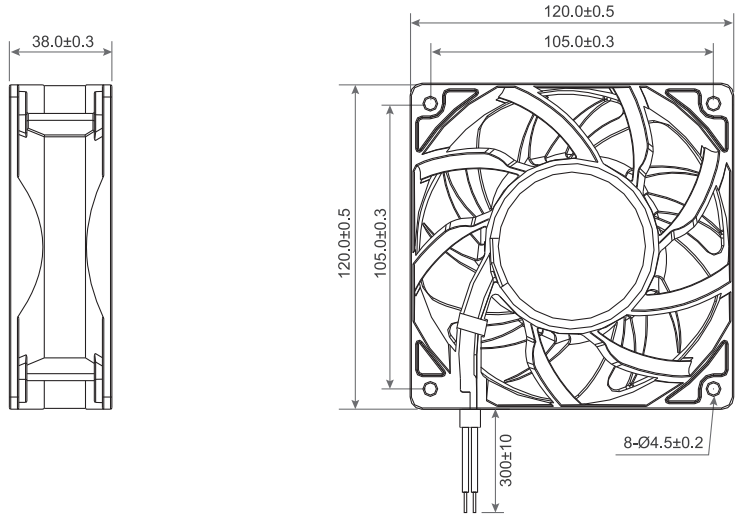

- Frame：Aluminum
  外框材質：鋁框
- Impeller：Thermoplastic PBT UL94-V0
  扇葉材質：環保防火PBT
- Bearing：◎Two Ball Bearing
  軸承：◎滾珠軸承
- Unit Weight：294.5g
  風扇單體重量：294.5克

P&Q Curve At Rated Voltage

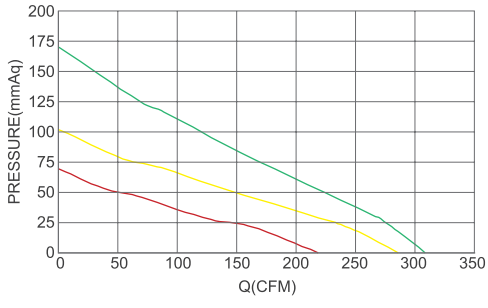

Model No.	Bearing Type	Voltage (VDC)	Current (A)	Power (W)	Speed (RPM)	Air Flow (CFM)	Air Flow (m^3/min)	Air Pressure (mmH2O)	Air Pressure (Inch H2O)	Noise (dBA)
TRY1238B12L	◎	12(8.0~13.5)	3.0	36.0	8000	218.0	6.18	69.2	2.72	66.7
TRY1238B12M	◎	12(8.0~13.5)	5.8	69.6	10000	281.0	7.96	102.0	4.01	70.4
TRY1238B12H	◎	12(8.0~13.5)	10.0	120.0	12000	308.5	8.74	170.0	6.69	78.0
TRY1238B24L	◎	24(18.0~26.5)	1.5	36.0	8000	218.0	6.18	69.2	2.72	66.7
TRY1238B24M	◎	24(18.0~26.5)	2.9	69.6	10000	281.0	7.96	102.0	4.01	70.4
TRY1238B24H	◎	24(18.0~26.5)	5.0	120.0	12000	308.5	8.74	170.0	6.69	78.0
TRY1238B48L	◎	48(36.0~54.0)	0.8	38.4	8000	218.0	6.18	69.2	2.72	66.7
TRY1238B48M	◎	48(36.0~54.0)	1.5	72.0	10000	281.0	7.96	102.0	4.01	70.4
TRY1238B48H	◎	48(36.0~54.0)	2.5	120.0	12000	308.5	8.74	170.0	6.69	78.0

X Bearing System ※：Sleeve ★：WRB ◎：Ball

★如果您需要的轉速或電壓或功能不在這份清單上，請與我們業務聯繫 Please contact us, if the SPEC you need is not in the list.

★產品詳細數據及功能請參閱承認書 Please see the approval sheet for more information . ★產品規格變更不另行通知 Specifications are subject to change without notice.

DC Axial Fan

TRD13038 SERIES 127X127X38mm

DIMENSIONS DRAWING UNIT：mm

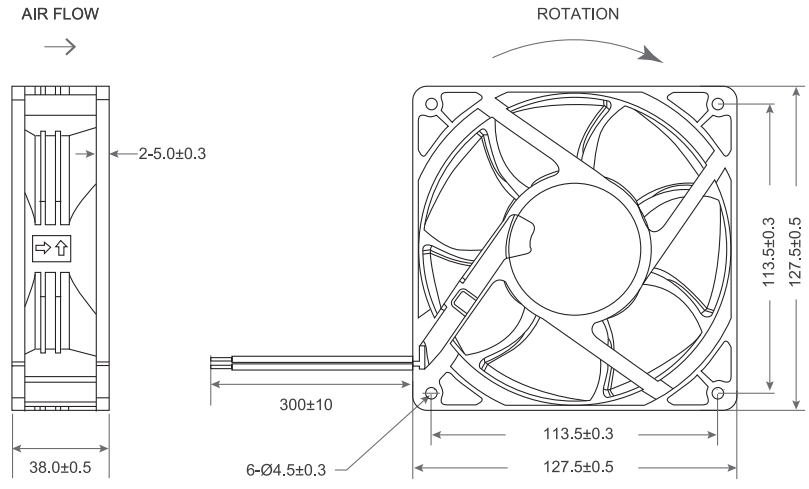

P&Q Curve At Rated Voltage

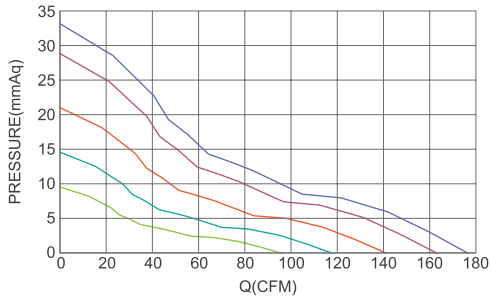

- Frame：Thermoplastic PBT UL94-V0
  外框材質：環保防火PBT
- Impeller：Thermoplastic PBT UL94-V0
  扇葉材質：環保防火PBT
- Bearing：※Sleeve・★WRB・◎Two Ball Bearing
  軸承：※含油・★WRB・◎滾珠軸承
- Unit Weight：380g
  風扇單體重量：380克

Model No.	Bearing Type	Voltage (VDC)	Current (A)	Power (W)	Speed (RPM)	Air Flow (CFM)	Air Flow (m^3/min)	Air Pressure (mmH_2O)	Air Pressure (Inch H_2O)	Noise (dBA)
TRD1338x12L	※★◎	12 (7.0~14.0)	0.46	5.52	3100	96.83	2.74	9.89	0.39	46.9
TRD1338x12M	※★◎	12 (7.0~14.0)	0.78	9.36	3800	118.69	3.36	14.86	0.59	50.2
TRD1338x12H	※★◎	12 (7.0~14.0)	1.24	14.88	4500	140.55	3.98	20.84	0.82	53.2
TRD1338x12VH	※★◎	12 (7.0~14.0)	1.68	20.16	5200	162.42	4.59	27.83	1.10	56.3
TRD1338x24L	※★◎	24 (15.0~27.0)	0.19	4.56	3100	96.83	2.74	9.89	0.39	46.9
TRD1338x24M	※★◎	24 (15.0~27.0)	0.39	9.36	3800	118.69	3.36	14.86	0.59	50.2
TRD1338x24H	※★◎	24 (15.0~27.0)	0.44	10.56	4500	140.55	3.98	20.84	0.82	53.2
TRD1338x24VH	※★◎	24 (15.0~27.0)	0.64	15.36	5200	162.42	4.59	27.83	1.10	57.9
TRD1338x24SH	※★◎	24 (15.0~27.0)	1.05	25.20	5700	178.03	5.04	33.44	1.32	58.9
TRD1338x48L	※★◎	48 (35.0~57.0)	0.11	5.28	3100	96.83	2.74	9.89	0.39	46.9
TRD1338x48M	※★◎	48 (35.0~57.0)	0.19	9.12	3800	118.69	3.36	14.86	0.59	50.2
TRD1338x48H	※★◎	48 (35.0~57.0)	0.32	15.36	4500	140.55	3.98	20.84	0.82	53.2
TRD1338x48VH	※★◎	48 (35.0~57.0)	0.40	19.20	5200	162.42	4.59	27.83	1.10	56.3
TRD1338x48SH	※★◎	48 (35.0~57.0)	0.52	24.96	5700	178.03	5.04	33.44	1.32	58.9

(x) Bearing System ※：Sleeve ★：WRB ◎：Ball

★如果您需要的轉速或電壓或功能不在這份清單上，請與我們業務聯繫 Please contact us, if the SPEC you need is not in the list.

★產品詳細數據及功能請參閱承認書 Please see the approval sheet for more information . ★產品規格變更不另行通知 Specifications are subject to change without notice.

DC Axial Fan

TRS13525 G SERIES 135X135X25mm

- Frame：Thermoplastic PBT UL94-V0
  外框材質：環保防火PBT
- Impeller：Thermoplastic PBT UL94-V0
  扇葉材質：環保防火PBT
- Bearing：※Sleeve・◎Two Ball bearing
  軸承：※含油・◎滾珠軸承
- Unit Weight：152.0g
  風扇單體重量：152.0克

P&Q Curve | At Rated Voltage

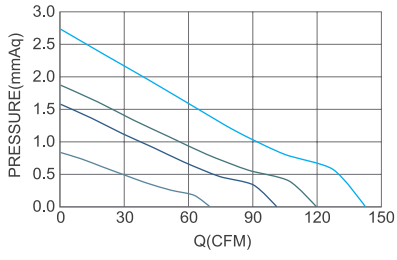

DIMENSIONS DRAWING | UNIT：mm

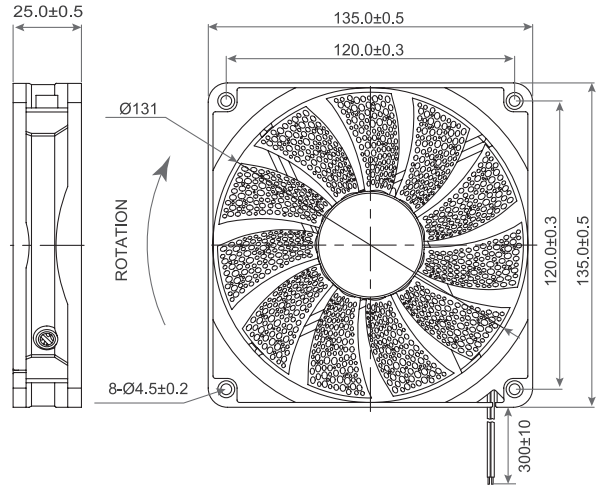

Model No.	Bearing Type	Voltage (VDC)	Current (A)	Power (W)	Speed (RPM)	Air Flow (CFM)	Air Flow (m^3/min)	Air Pressure (mmH₂O)	Air Pressure (Inch H₂O)	Noise (dBA)
TRS13525X12L	※◎	12 (10.8~13.8)	0.20	2.40	900	69.79	1.98	0.83	0.03	15.8
TRS13525X12M	※◎	12 (10.8~13.8)	0.28	3.36	1200	101.25	2.87	1.57	0.06	22.1
TRS13525X12H	※◎	12 (6.0~13.8)	0.33	3.96	1500	119.80	3.39	1.86	0.07	27.9
TRS13525X12VH	※◎	12 (6.0~13.8)	0.45	5.40	1800	143.10	4.05	2.72	0.11	32.7

DC Axial Fan

SRL13525 SERIES 135X135X25mm

- Frame：Thermoplastic PBT UL94-V0
  外框材質：環保防火PBT
- Impeller：Thermoplastic PBT UL94-V0
  扇葉材質：環保防火PBT
- Bearing：※Sleeve・★WRB・◎Two Ball
  軸承：※含油・★WRB・◎滾珠軸承
- Unit Weight：154.4g
  風扇單體重量：154.4克

P&Q Curve | At Rated Voltage

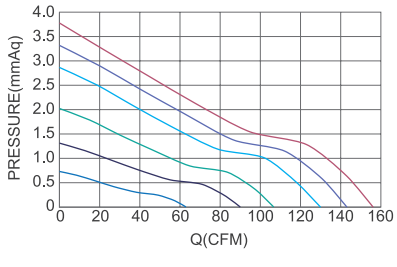

DIMENSIONS DRAWING | UNIT：mm

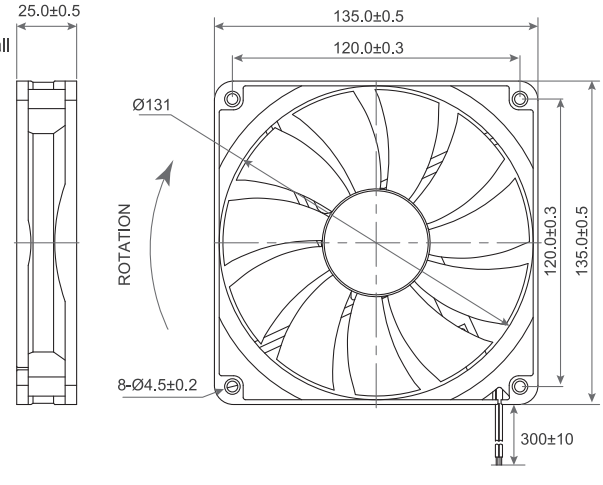

Model No.	Bearing Type	Voltage (VDC)	Current (A)	Power (W)	Speed (RPM)	Air Flow (CFM)	Air Flow (m^3/min)	Air Pressure (mmH₂O)	Air Pressure (Inch H₂O)	Noise (dBA)
SRLx1352512L	※★◎	12 (10~13.8)	0.20	2.40	900	62.93	1.78	0.75	0.03	18.4
SRLx1352512M	※★◎	12 (10~13.8)	0.28	3.36	1200	90.68	2.57	1.33	0.05	23.3
SRLx1352512H	※★◎	12 (6.0~13.8)	0.33	3.96	1500	106.86	3.02	2.03	0.08	29.2
SRLx1352512HH	※★◎	12 (6.0~13.8)	0.45	5.40	1800	129.76	3.67	2.88	0.11	33.9
SRLx1352512HH	※★◎	12 (6.0~13.8)	0.50	6.00	2000	142.98	4.05	3.31	0.13	40.3
SRLx1352512EH	※★◎	12 (6.0~13.8)	0.50	6.00	2200	156.19	4.42	3.77	0.15	43.3

★如果您需要的轉速或電壓或功能不在這份清單上，請與我們業務聯繫 Please contact us, if the SPEC you need is not in the list.
★產品詳細數據及功能請參閱承認書 Please see the approval sheet for more information . ★產品規格變更不另行通知 Specifications are subject to change without notice.

DC Axial Fan

TRS13628 U SERIES Ø136x28mm

- Frame：Aluminum
  外框材質：鋁框
- Impeller：Thermoplastic PBT UL94-V0
  扇葉材質：環保防火PBT
- Bearing：◎Two Ball bearing
  軸承：◎滾珠軸承
- Unit Weight：204g
  風扇單體重量：204克

P&Q Curve | At Rated Voltage

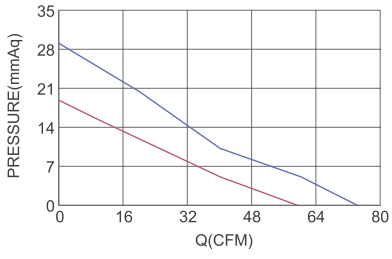

DIMENSIONS DRAWING | UNIT：mm

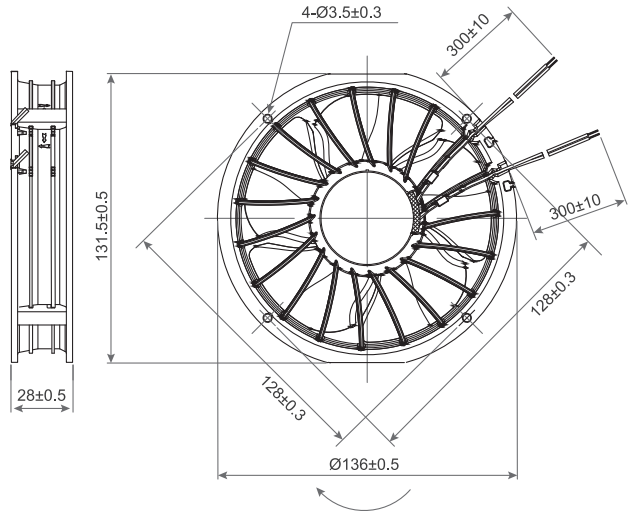

Model No.	Bearing Type	Voltage (VDC)	Current (A)	Power (W)	Speed (RPM)	Air Flow (CFM)	Air Flow (m^3/min)	Air Pressure (mmH_2O)	Air Pressure (Inch H_2O)	Noise (dBA)
TRS13628B12M	◎	12 (7.5~13.5)	0.16	1.92	4350	59.2	1.67	18.79	0.74	47.0
TRS13628B12H	◎	12 (7.5~13.5)	0.25	3.00	5450	74.2	2.10	28.96	1.14	52.0
TRS13628B12VH	◎	24 (18.0~26.5)	0.08	1.92	4350	59.2	1.67	18.79	0.74	47.0
TRS13628B12SH	◎	24 (18.0~26.5)	0.13	3.00	5450	74.2	2.10	28.96	1.14	52.0

DC Axial Fan

SRL13820 SERIES 138X138X20mm

- Frame：Thermoplastic PBT UL94-V0
  外框材質：環保防火PBT
- Impeller：Thermoplastic PBT UL94-V0
  扇葉材質：環保防火PBT
- Bearing：※Sleeve・★WRB・◎Two Ball
  軸承：※含油・★WRB・◎滾珠軸承
- Unit Weight：142g
  風扇單體重量：142克

P&Q Curve | At Rated Voltage

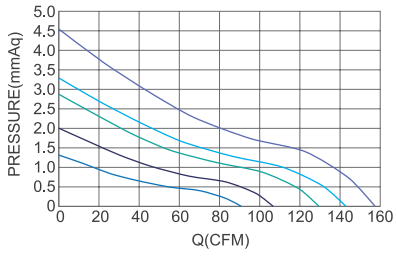

DIMENSIONS DRAWING | UNIT：mm

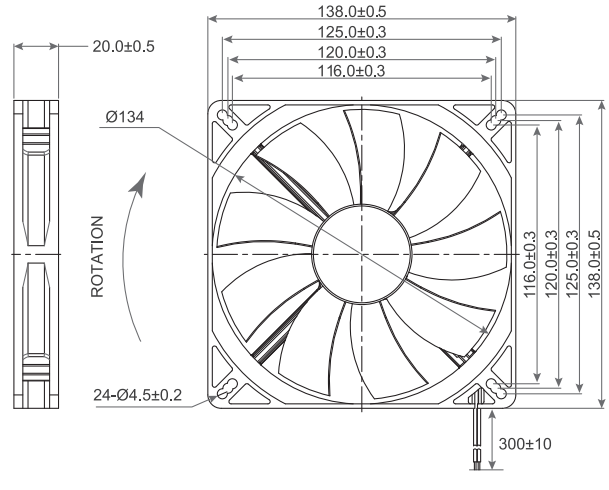

Model No.	Bearing Type	Voltage (VDC)	Current (A)	Power (W)	Speed (RPM)	Air Flow (CFM)	Air Flow (m^3/min)	Air Pressure (mmH_2O)	Air Pressure (Inch H_2O)	Noise (dBA)
SRLx1382012L	※★◎	12 (6.0~13.8)	0.20	2.40	1200	77.43	2.19	1.54	0.06	23.2
SRLx1382012M	※★◎	12 (6.0~13.8)	0.30	3.60	1500	95.62	2.71	2.08	0.08	28.2
SRLx1382012H	※★◎	12 (6.0~13.8)	0.40	4.80	1800	112.04	3.17	2.95	0.12	33.5
SRLx1382012HH	※★◎	12 (6.0~13.8)	0.60	7.20	2100	132.46	3.75	3.77	0.15	38.1
SRLx1382012EH	※★◎	12 (6.0~13.8)	0.80	9.60	2500	157.36	4.45	4.55	0.18	42.9

X Bearing System ※：Sleeve ★：WRB ◎：Ball

★如果您需要的轉速或電壓或功能不在這份清單上，請與我們業務聯繫 Please contact us, if the SPEC you need is not in the list.

★產品詳細數據及功能請參閱承認書 Please see the approval sheet for more information . ★產品規格變更不另行通知 Specifications are subject to change without notice.

DC Axial Fan

TRS14025 SERIES 140X140X25mm

DIMENSIONS DRAWING UNIT：mm

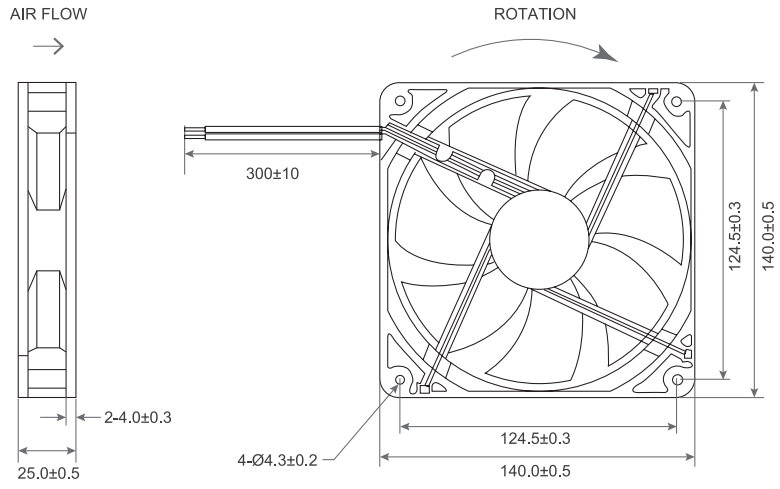

P&Q Curve At Rated Voltage

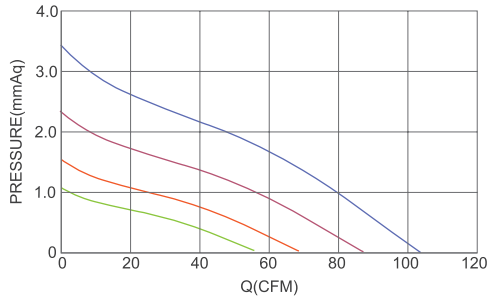

- Frame：Thermoplastic PBT UL94-V0
  外框材質：環保防火PBT
- Impeller：Thermoplastic PBT UL94-V0
  扇葉材質：環保防火PBT
- Bearing：※Sleeve・★WRB・◎Two Ball Bearing
  軸承：※含油・★WRB・◎滾珠軸承
- Unit Weight：200g
  風扇單體重量：200克

Model No.	Bearing Type	Voltage (VDC)	Current (A)	Power (W)	Speed (RPM)	Air Flow (CFM)	Air Flow (m^3/min)	Air Pressure (mmH2O)	Air Pressure (Inch H2O)	Noise (dBA)
TRS1425x12D	※★◎	12 (7.0~14.0)	0.05	0.60	1200	55.90	1.58	1.01	0.04	26.8
TRS1425x12L	※★◎	12 (7.0~14.0)	0.13	1.56	1600	68.80	1.95	1.52	0.06	33.4
TRS1425x12M	※★◎	12 (7.0~14.0)	0.18	2.16	2000	86.00	2.43	2.38	0.09	39.4
TRS1425x12H	※★◎	12 (7.0~14.0)	0.33	3.96	2400	103.20	2.92	3.43	0.13	43.8
TRS1425x24D	※★◎	24 (15.0~27.0)	0.05	1.20	1200	55.90	1.58	1.00	0.04	26.8
TRS1425x24L	※★◎	24 (15.0~27.0)	0.07	1.68	1600	73.10	2.07	1.72	0.07	33.4
TRS1425x24M	※★◎	24 (15.0~27.0)	0.10	2.40	2000	90.30	2.56	2.62	0.10	39.4
TRS1425x24H	※★◎	24 (15.0~27.0)	0.18	4.32	2400	107.50	3.04	3.72	0.15	43.8

X Bearing System ※：Sleeve ★：WRB ◎：Ball

★如果您需要的轉速或電壓或功能不在這份清單上，請與我們業務聯繫 Please contact us, if the SPEC you need is not in the list.

★產品詳細數據及功能請參閱承認書 Please see the approval sheet for more information . ★產品規格變更不另行通知 Specifications are subject to change without notice.

DC Axial Fan

SRL14025 SERIES 140X140X25mm

- Frame：Thermoplastic PBT UL94-V0
  外框材質：環保防火PBT
- Impeller：Thermoplastic PBT UL94-V0
  扇葉材質：環保防火PBT
- Bearing：※Sleeve・★WRB・◎Two Ball
  軸承：※含油・★WRB・◎滾珠軸承
- Unit Weight：173.6g
  風扇單體重量：173.6克

P&Q Curve | At Rated Voltage

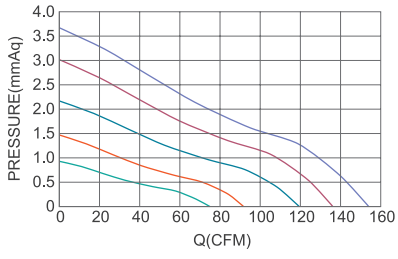

DIMENSIONS DRAWING | UNIT：mm

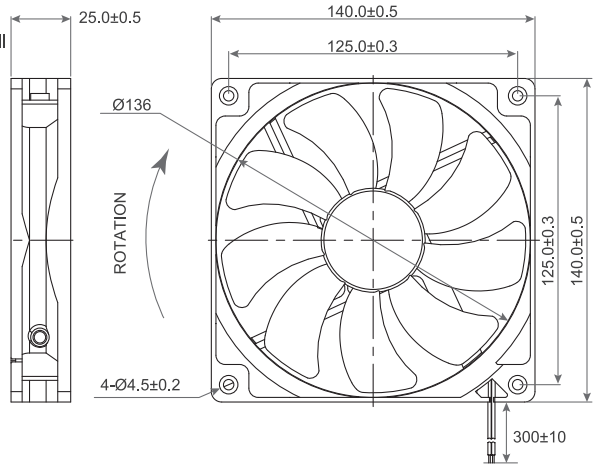

Model No.	Bearing Type	Voltage (VDC)	Current (A)	Power (W)	Speed (RPM)	Air Flow (CFM)	Air Flow (m^3/min)	Air Pressure (mmH₂O)	Air Pressure (Inch H₂O)	Noise (dBA)
SRLx1402512L	※★◎	12 (7.0~13.8)	0.20	2.40	900	74.63	2.11	0.94	0.04	15.5
SRLx1402512M	※★◎	12 (6.0~13.8)	0.30	3.60	1200	92.16	2.61	1.46	0.06	24.9
SRLx1402512H	※★◎	12 (6.0~13.8)	0.40	4.80	1500	119.34	3.38	2.17	0.09	31.7
SRLx1402512HH	※★◎	12 (6.0~13.8)	0.50	6.00	1800	135.74	3.84	3.01	0.12	36.7
SRLx1402512EH	※★◎	12 (6.0~13.8)	0.60	7.20	2000	153.47	4.34	3.66	0.14	39.5

DC Axial Fan

TRS14025 G SERIES 140X140X25mm

- Frame：Thermoplastic PBT UL94-V0
  外框材質：環保防火PBT
- Impeller：Thermoplastic PBT UL94-V0
  扇葉材質：環保防火PBT
- Bearing：※Sleeve・◎Two Ball
  軸承：※含油・◎滾珠軸承
- Unit Weight：163.7g
  風扇單體重量：163.7克

P&Q Curve | At Rated Voltage

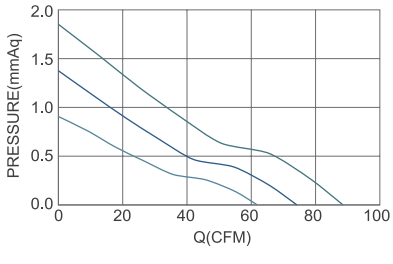

DIMENSIONS DRAWING | UNIT：mm

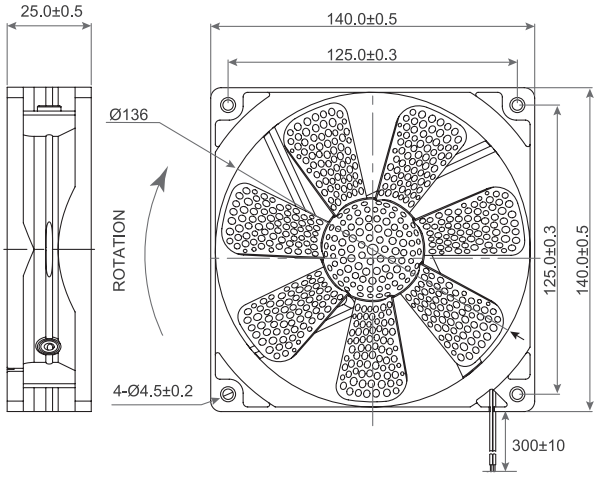

Model No.	Bearing Type	Voltage (VDC)	Current (A)	Power (W)	Speed (RPM)	Air Flow (CFM)	Air Flow (m^3/min)	Air Pressure (mmH₂O)	Air Pressure (Inch H₂O)	Noise (dBA)
TRS1425x12L	※◎	12 (10.8~13.8)	0.10	1.20	900	62.14	1.76	0.92	0.04	13.9
TRS1425x12M	※◎	12 (8.0~13.8)	0.15	1.80	1200	74.14	2.10	1.36	0.05	22.1
TRS1425x12H	※◎	12 (8.0~13.8)	0.20	2.40	1500	88.62	2.51	1.84	0.07	25.5

X Bearing System ※：Sleeve ★：WRB ◎：Ball

★如果您需要的轉速或電壓或功能不在這份清單上，請與我們業務聯繫 Please contact us, if the SPEC you need is not in the list.

★產品詳細數據及功能請參閱承認書 Please see the approval sheet for more information . ★產品規格變更不另行通知 Specifications are subject to change without notice.

DC Axial Fan

TRY14038 SERIES 140X140X38mm

DIMENSIONS DRAWING UNIT：mm

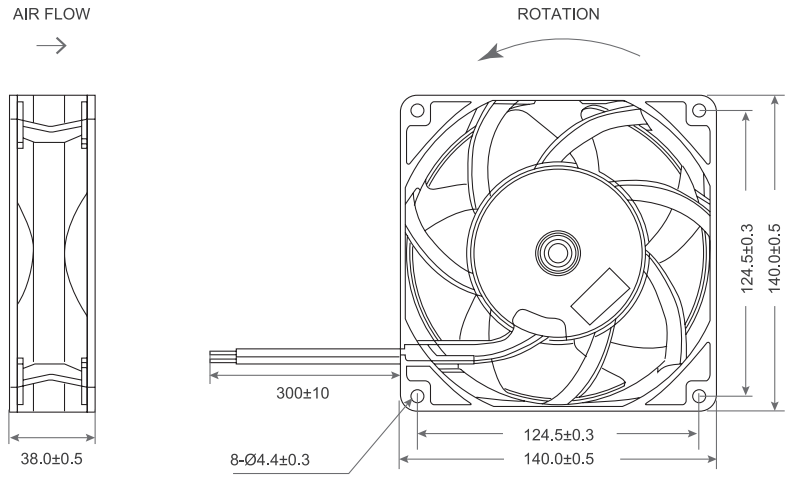

- Frame：Aluminum
  外框材質：鋁框
- Impeller：Thermoplastic PBT UL94-V0
  扇葉材質：環保防火PBT
- Bearing：※Sleeve・★WRB・◎Two Ball Bearing
  軸承：※含油・★WRB・◎滾珠軸承
- Unit Weight：380g
  風扇單體重量：380克

P&Q Curve At Rated Voltage

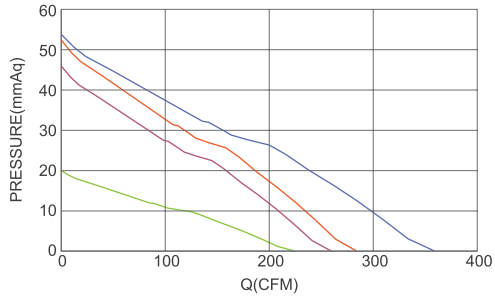

Model No.	Bearing Type	Voltage (VDC)	Current (A)	Power (W)	Speed (RPM)	Air Flow (CFM)	Air Flow (m^3/min)	Air Pressure (mmH2O)	Air Pressure (Inch H2O)	Noise (dBA)
TRY14038x12L	※★◎	12 (7.0~14.0)	1.65	19.80	5000	195.42	5.53	27.15	1.07	55.6
TRY14038x12M	※★◎	12 (7.0~14.0)	1.90	22.80	5500	214.96	6.08	32.85	1.29	57.6
TRY14038x12H	※★◎	12 (7.0~14.0)	2.45	29.04	6000	234.50	6.63	39.10	1.54	59.4
TRY14038x12VH	※★◎	12 (7.0~14.0)	3.10	37.20	6500	254.04	7.19	45.89	1.81	60.7
TRY14038x24L	※★◎	24 (15.0~27.0)	0.73	17.52	5000	195.42	5.53	27.15	1.07	55.6
TRY14038x24M	※★◎	24 (15.0~27.0)	0.95	22.80	5500	214.96	6.08	32.85	1.29	57.6
TRY14038x24H	※★◎	24 (15.0~27.0)	1.21	29.04	6000	234.50	6.63	39.10	1.54	59.4
TRY14038x24VH	※★◎	24 (15.0~27.0)	1.55	37.20	6500	254.04	7.19	45.89	1.81	60.7
TRY14038x24SH	※★◎	24 (15.0~27.0)	2.41	57.84	7000	273.59	7.74	53.22	2.10	64.2
TRY14038x24D(U)*	※★◎	24 (15.0~27.0)	2.73	62.42	4000	221.08	6.26	19.73	0.77	67.5
TRY14038x24H(U)*	※★◎	24 (15.0~27.0)	5.80	72.00	6000	354.51	10.03	53.71	2.12	73.4
TRY14038x48L	※★◎	48 (35.0~57.0)	0.40	18.96	5000	195.42	5.53	27.15	1.07	55.6
TRY14038x48M	※★◎	48 (35.0~57.0)	0.48	22.80	5500	214.96	6.08	32.85	1.29	57.6
TRY14038x48H	※★◎	48 (35.0~57.0)	0.60	29.04	6000	234.50	6.63	39.10	1.54	59.4
TRY14038x48VH	※★◎	48 (35.0~57.0)	0.78	37.20	6500	254.04	7.19	45.89	1.81	60.7
TRY14038x48SH	※★◎	48 (35.0~57.0)	1.05	50.40	7000	273.59	7.74	53.22	2.10	64.2
TRY14038x48D(U)*	※★◎	48 (35.0~57.0)	1.35	62.42	4000	221.08	6.26	19.73	0.77	67.5
TRY14038x48H(U)*	※★◎	48 (35.0~57.0)	3.00	72.00	6000	354.51	10.03	53.71	2.12	73.4

x Bearing System ※：Sleeve ★：WRB ◎：Ball

★如果您需要的轉速或電壓或功能不在這份清單上，請與我們業務聯繫 Please contact us, if the SPEC you need is not in the list.

★產品詳細數據及功能請參閱承認書 Please see the approval sheet for more information . ★產品規格變更不另行通知 Specifications are subject to change without notice.

DC Axial Fan

TRD14050 SERIES 140X140X50mm

DIMENSIONS DRAWING UNIT：mm

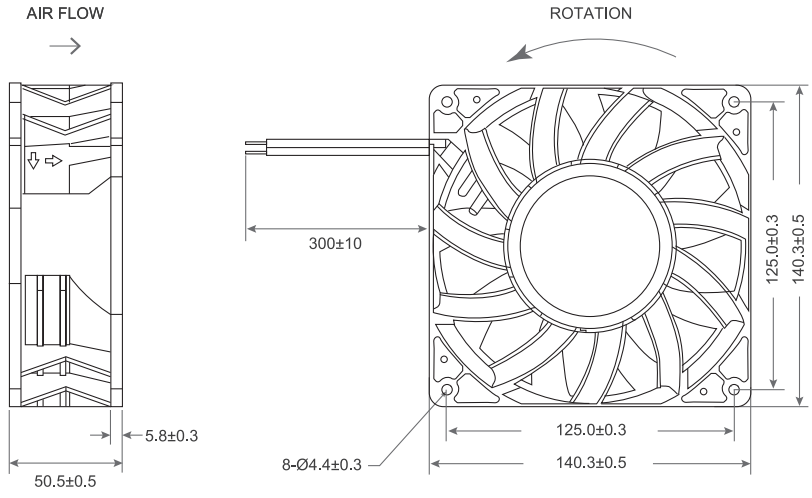

- Frame：Thermoplastic PBT UL94-V0
  外框材質：環保防火PBT
- Impeller：Thermoplastic PBT UL94-V0
  扇葉材質：環保防火PBT
- Bearing：※Sleeve・★WRB・◎Two Ball Bearing
  軸承：※含油・★WRB・◎滾珠軸承
- Unit Weight：400g
  風扇單體重量：400克

P&Q Curve At Rated Voltage

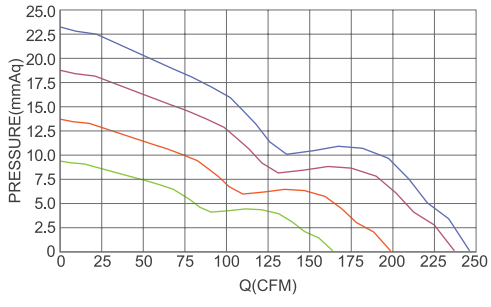

Model No.	Bearing Type	Voltage (VDC)	Current (A)	Power (W)	Speed (RPM)	Air Flow (CFM)	Air Flow (m^3/min)	Air Pressure (mmH_2O)	Air Pressure (Inch H_2O)	Noise (dBA)
TRD14050x12D	※★◎	12 (7.0~14.0)	0.80	9.60	2500	166.41	4.71	9.50	0.37	49.7
TRD14050x12L	※★◎	12 (7.0~14.0)	1.30	15.60	3000	199.69	5.65	13.68	0.54	55.5
TRD14050x12H	※★◎	12 (7.0~14.0)	2.05	24.60	3500	232.97	6.59	18.62	0.73	59.2
TRD14050x12VH	※★◎	12 (7.0~14.0)	3.10	37.20	4000	246.03	6.96	24.32	0.96	62.8
TRD14050x24D	※★◎	24 (15.0~27.0)	0.40	9.60	2500	166.41	4.71	9.50	0.37	49.7
TRD14050x24L	※★◎	24 (15.0~27.0)	0.65	15.60	3000	199.69	5.65	13.68	0.54	55.5
TRD14050x24H	※★◎	24 (15.0~27.0)	1.00	24.00	3500	232.97	6.59	18.62	0.73	59.2
TRD14050x24VH	※★◎	24 (15.0~27.0)	1.50	36.00	4000	246.03	6.96	24.32	0.96	62.8
TRD14050x48D	※★◎	48 (35.0~57.0)	0.22	10.56	2500	166.41	4.71	9.50	0.37	49.7
TRD14050x48L	※★◎	48 (35.0~57.0)	0.32	15.36	3000	199.69	5.65	13.68	0.54	55.5
TRD14050x48H	※★◎	48 (35.0~57.0)	0.50	24.00	3500	232.97	6.59	18.62	0.73	59.2
TRD14050x48VH	※★◎	48 (35.0~57.0)	0.75	36.00	4000	246.03	6.96	24.32	0.96	62.8

(X) Bearing System ※：Sleeve ★：WRB ◎：Ball

★如果您需要的轉速或電壓或功能不在這份清單上，請與我們業務聯繫 Please contact us, if the SPEC you need is not in the list.

★產品詳細數據及功能請參閱承認書 Please see the approval sheet for more information . ★產品規格變更不另行通知 Specifications are subject to change without notice.

DC Axial Fan

TRS15051 SERIES 150X150X51mm

DIMENSIONS DRAWING UNIT：mm

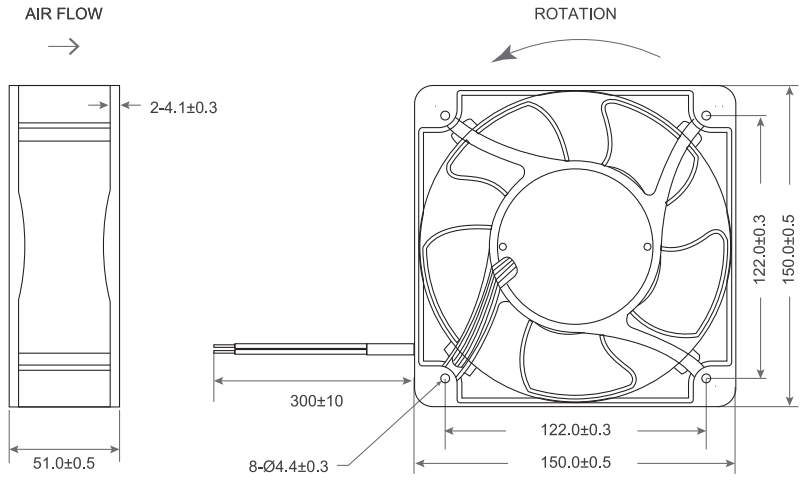

- Frame：Aluminum
  外框材質：鋁框
- Impeller：Thermoplastic PBT UL94-V0
  扇葉材質：環保防火PBT
- Bearing：※Sleeve・★WRB・◎Two Ball Bearing
  軸承：※含油・★WRB・◎滾珠軸承
- Unit Weight：760g
  風扇單體重量：760克

P&Q Curve At Rated Voltage

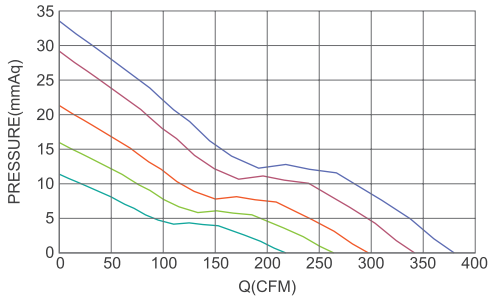

Model No.	Bearing Type	Voltage (VDC)	Current (A)	Power (W)	Speed (RPM)	Air Flow (CFM)	Air Flow (m^3/min)	Air Pressure (mmH2O)	Air Pressure (Inch H2O)	Noise (dBA)
TRS1551x12M	※★◎	12 (7.0~14.0)	0.88	10.56	3000	224.71	6.36	12.07	0.48	52.3
TRS1551x12H	※★◎	12 (7.0~14.0)	1.22	14.64	3500	262.17	7.42	16.43	0.65	56.6
TRS1551x12VH	※★◎	12 (7.0~14.0)	2.42	29.04	4000	299.62	8.48	21.46	0.84	60.5
TRS1551x24M	※★◎	24 (15.0~27.0)	0.50	12.00	3000	224.71	6.36	12.07	0.48	52.3
TRS1551x24H	※★◎	24 (15.0~27.0)	0.65	15.60	3500	262.17	7.42	16.43	0.65	56.6
TRS1551x24VH	※★◎	24 (15.0~27.0)	1.02	24.48	4000	299.62	8.48	21.46	0.84	60.5
TRS1551x24SH	※★◎	24 (15.0~27.0)	1.86	44.64	4500	344.56	9.74	28.37	1.11	62.3
TRS1551x24UH	※★◎	24 (15.0~27.0)	2.20	52.80	5000	374.52	10.59	33.53	1.32	66.8
TRS1551x48M	※★◎	48 (35.0~58.0)	0.29	13.92	3000	224.71	6.36	12.07	0.48	52.3
TRS1551x48H	※★◎	48 (35.0~58.0)	0.44	21.12	3500	262.17	7.42	16.43	0.65	56.6
TRS1551x48VH	※★◎	48 (35.0~58.0)	0.60	28.80	4000	299.62	8.48	21.46	0.84	60.5
TRS1551x48SH	※★◎	48 (35.0~58.0)	0.93	44.64	4500	344.56	9.74	28.37	1.11	62.3
TRS1551x48UH	※★◎	48 (35.0~58.0)	1.10	52.80	5000	374.52	10.59	33.53	1.32	66.8

X Bearing System ※：Sleeve ★：WRB ◎：Ball

★如果您需要的轉速或電壓或功能不在這份清單上，請與我們業務聯繫 Please contact us, if the SPEC you need is not in the list.

★產品詳細數據及功能請參閱承認書 Please see the approval sheet for more information . ★產品規格變更不另行通知 Specifications are subject to change without notice.

DC Axial Fan

TRS16050 SERIES 160X160X50mm

DIMENSIONS DRAWING UNIT：mm

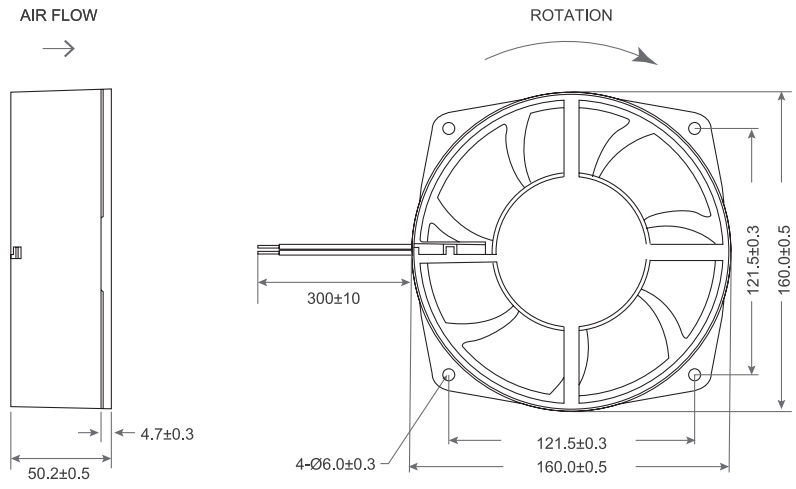

- Frame：Thermoplastic PBT UL94-V0
  外框材質：環保防火PBT
- Impeller：Thermoplastic PBT UL94-V0
  扇葉材質：環保防火PBT
- Bearing：※Sleeve・★WRB・◎Two Ball Bearing
  軸承：※含油・★WRB・◎滾珠軸承
- Unit Weight：720g
  風扇單體重量：720克

P&Q Curve At Rated Voltage

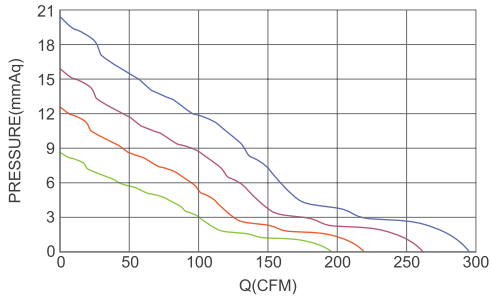

Model No.	Bearing Type	Voltage (VDC)	Current (A)	Power (W)	Speed (RPM)	Air Flow (CFM)	Air Flow (m^3/min)	Air Pressure (mmH_2O)	Air Pressure (Inch H_2O)	Noise (dBA)
TRS16050x12D	※★◎	12 (7.0~14.0)	1.00	12.00	2800	193.01	5.46	8.76	0.34	52.4
TRS16050x12L	※★◎	12 (7.0~14.0)	1.16	13.92	3300	227.47	6.44	12.16	0.48	55.9
TRS16050x12M	※★◎	12 (7.0~14.0)	1.75	21.00	3800	261.94	7.41	16.13	0.64	60.5
TRS16050x24D	※★◎	24 (15.0~27.0)	0.50	12.00	2800	193.01	5.46	8.76	0.34	52.4
TRS16050x24L	※★◎	24 (15.0~27.0)	0.77	18.48	3300	227.47	6.44	12.16	0.48	55.9
TRS16050x24M	※★◎	24 (15.0~27.0)	1.03	24.72	3800	261.94	7.41	16.13	0.64	60.5
TRS16050x24H	※★◎	24 (15.0~27.0)	1.40	33.60	4300	296.40	8.39	20.65	0.81	64.7
TRS16050x48D	※★◎	48 (35.0~57.0)	0.25	12.00	2800	193.01	5.46	8.76	0.34	52.4
TRS16050x48L	※★◎	48 (35.0~57.0)	0.33	15.84	3300	227.47	6.44	12.16	0.48	55.9
TRS16050x48M	※★◎	48 (35.0~57.0)	0.55	26.40	3800	261.94	7.41	16.13	0.64	60.5
TRS16050x48H	※★◎	48 (35.0~57.0)	0.70	33.60	4300	296.40	8.39	20.65	0.81	64.7

(x) Bearing System ※：Sleeve ★：WRB ◎：Ball

★如果您需要的轉速或電壓或功能不在這份清單上，請與我們業務聯繫 Please contact us, if the SPEC you need is not in the list.

★產品詳細數據及功能請參閱承認書 Please see the approval sheet for more information . ★產品規格變更不另行通知 Specifications are subject to change without notice.

DC Axial Fan

TRL17238 U SERIES 172x150x38mm

DIMENSIONS DRAWING UNIT：mm

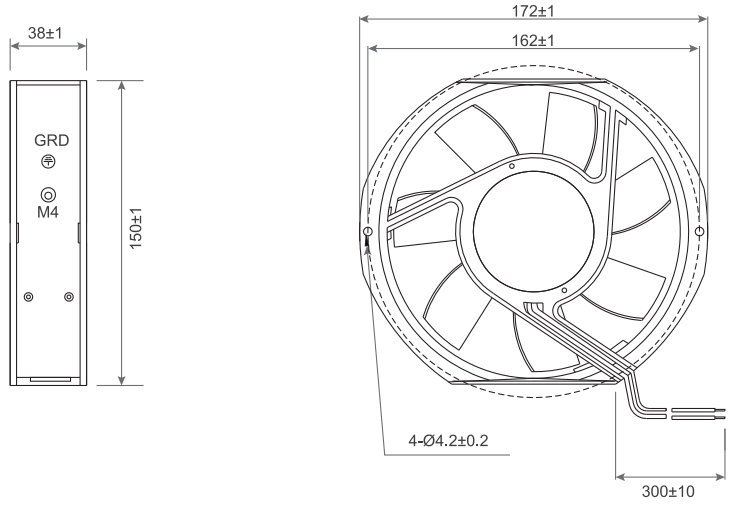

- Frame：Aluminum
  外框材質：鋁框
- Impeller：Thermoplastic PBT UL94-V0
  扇葉材質：環保防火PBT
- Bearing：※Sleeve・★WRB・◎Two Ball Bearing
  軸承：※含油・★WRB・◎滾珠軸承
- Unit Weight：515g
  風扇單體重量：515克

P&Q Curve At Rated Voltage

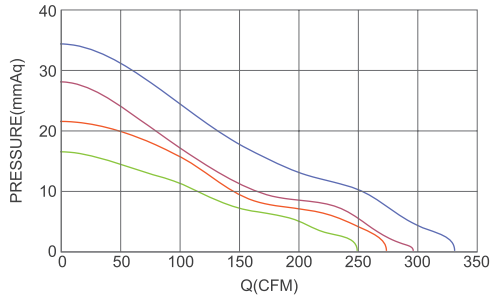

Model No.	Bearing Type	Voltage (VDC)	Current (A)	Power (W)	Speed (RPM)	Air Flow (CFM)	Air Flow (m^3/min)	Air Pressure (mmH₂O)	Air Pressure (Inch H₂O)	Noise (dBA)
TRL17238x12D	※★◎	12 (7.5~13.5)	0.76	9.12	3000	222.17	6.29	16.38	0.65	60.9
TRL17238x12L	※★◎	12 (7.5~13.5)	0.98	11.76	3500	257.17	7.28	21.34	0.84	64.3
TRL17238x12M	※★◎	12 (7.5~13.5)	1.17	14.04	4000	297.16	8.41	27.94	1.10	68.4
TRL17238x12H	※★◎	24 (7.5~13.5)	3.00	36.00	4600	332.18	9.40	34.21	1.35	71.2
TRL17238x24D	※★◎	24 (18.0~26.5)	0.40	9.60	3000	222.17	6.29	16.38	0.65	60.9
TRL17238x24L	※★◎	24 (18.0~26.5)	0.50	12.00	3500	257.17	7.28	21.34	0.84	64.3
TRL17238x24M	※★◎	24 (18.0~26.5)	0.62	14.88	4000	297.16	8.41	27.94	1.10	68.4
TRL17238x24H	※★◎	24 (18.0~26.5)	1.60	38.40	4600	332.18	9.40	34.21	1.35	71.2
TRL17238x48D	※★◎	48 (36.0~54.0)	0.22	10.56	3000	222.17	6.29	16.38	0.65	60.9
TRL17238x48L	※★◎	48 (36.0~54.0)	0.27	12.96	3500	257.17	7.28	21.34	0.84	64.3
TRL17238x48M	※★◎	48 (36.0~54.0)	0.31	17.88	4000	297.16	8.41	27.94	1.10	68.4
TRL17238x48H	※★◎	48 (36.0~54.0)	0.80	38.40	4600	332.18	9.40	34.21	1.35	71.2

(x) Bearing System ※：Sleeve ★：WRB ◎：Ball

★如果您需要的轉速或電壓或功能不在這份清單上，請與我們業務聯繫 Please contact us, if the SPEC you need is not in the list.

★產品詳細數據及功能請參閱承認書 Please see the approval sheet for more information . ★產品規格變更不另行通知 Specifications are subject to change without notice.

DC Axial Fan

TRL17238 SERIES 172X151X38mm

DIMENSIONS DRAWING UNIT：mm

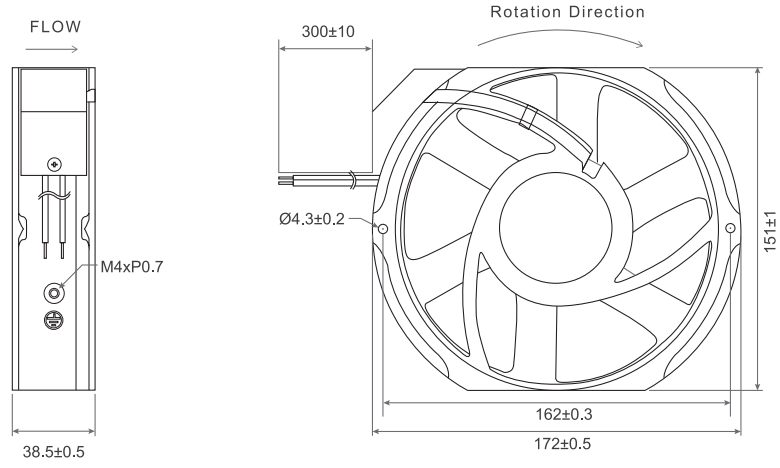

- Frame：Aluminum
  外框材質：鋁框
- Impeller：Thermoplastic PBT UL94-V0
  扇葉材質：環保防火PBT
- Bearing：◎Two Ball Bearing
  軸承：◎滾珠軸承
- Ingress Protection：Optional IP54 or IP56 or IP68
  防護等級：可選擇 IP54 or IP56 or IP68

P&Q Curve At Rated Voltage

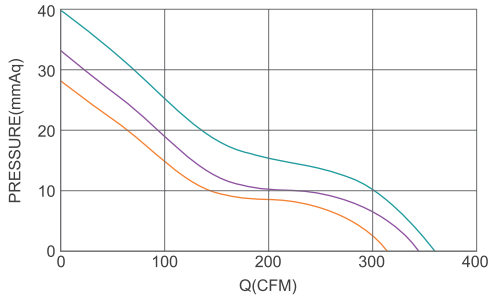

Model No.	Bearing Type	Voltage (VDC)	Current (A)	Power (W)	Speed (RPM)	Air Flow (CFM)	Air Flow (m^3/min)	Air Pressure (mmH_2O)	Air Pressure (Inch H_2O)	Noise (dBA)
TRL17238B12SD	◎	12 (7.0~14.0)	1.10	13.20	2800	210.0	5.94	14.48	0.57	52.0
TRL17238B12D	◎	12 (7.0~14.0)	1.59	19.08	3200	245.0	6.93	18.54	0.73	56.0
TRL17238B12L	◎	12 (7.0~14.0)	2.34	28.08	3600	275.0	7.78	23.12	0.91	60.0
TRL17238B12M	◎	12 (7.0~14.0)	3.33	39.96	4000	310.0	8.77	28.45	1.12	64.0
TRL17238B24SD	◎	24 (15.0~27.0)	0.54	12.96	2800	210.0	5.94	14.48	0.57	52.0
TRL17238B24D	◎	24 (15.0~27.0)	0.78	18.72	3200	245.0	6.93	18.54	0.73	56.0
TRL17238B24L	◎	24 (15.0~27.0)	1.08	25.92	3600	275.0	7.78	23.12	0.91	60.0
TRL17238B24M	◎	24 (15.0~27.0)	1.38	33.12	4000	310.0	8.77	28.45	1.12	64.0
TRL17238B24H	◎	24 (15.0~27.0)	1.91	45.84	4400	340.0	9.62	33.53	1.32	68.0
TRL17238B24VH	◎	24 (15.0~57.0)	2.34	56.16	4800	360.0	10.19	39.12	1.54	72.0
TRL17238B48SD	◎	48 (35.0~57.0)	0.28	13.44	2800	210.0	5.94	14.48	0.57	52.0
TRL17238B48D	◎	48 (35.0~57.0)	0.37	17.76	3200	245.0	6.93	18.54	0.73	56.0
TRL17238B48L	◎	48 (35.0~57.0)	0.52	24.96	3600	275.0	7.78	23.12	0.91	60.0
TRL17238B48M	◎	48 (35.0~57.0)	0.68	32.64	4000	310.0	8.77	28.45	1.12	64.0
TRL17238B48H	◎	48 (35.0~57.0)	0.90	43.20	4400	340.0	9.62	33.53	1.32	68.0
TRL17238B48VH	◎	48 (35.0~57.0)	1.13	54.24	4800	360.0	10.19	39.12	1.54	72.0

X Bearing System ※：Sleeve ★：WRB ◎：Ball

★如果您需要的轉速或電壓或功能不在這份清單上，請與我們業務聯繫 Please contact us, if the SPEC you need is not in the list.

★產品詳細數據及功能請參閱承認書 Please see the approval sheet for more information . ★產品規格變更不另行通知 Specifications are subject to change without notice.

DC Axial Fan

TRL17238 B SERIES 172X151X38mm

DIMENSIONS DRAWING UNIT：mm

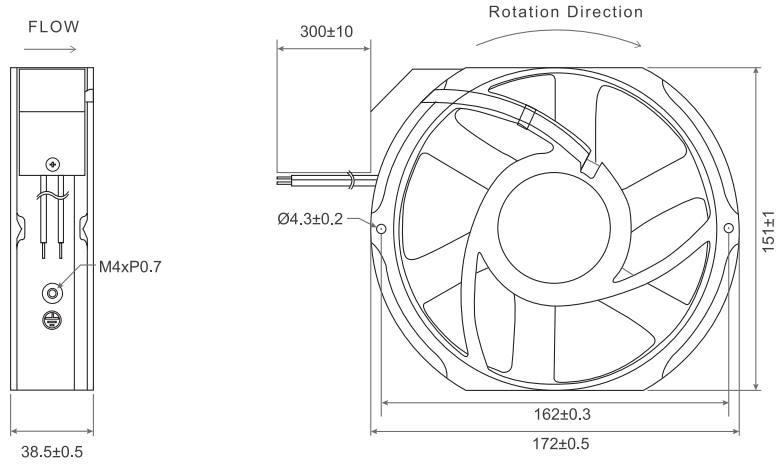

- Frame：Aluminum
  外框材質：鋁框
- Impeller：Metal
  扇葉材質：金屬葉
- Bearing：◎Two Ball Bearing
  軸承：◎滾珠軸承
- Ingress Protection：Optional IP54 or IP56 or IP68
  防護等級：可選擇 IP54 or IP56 or IP68

P&Q Curve At Rated Voltage

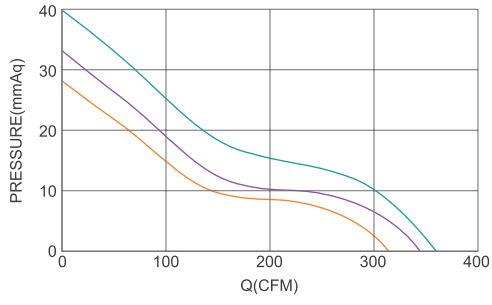

Model No.	Bearing Type	Voltage (VDC)	Current (A)	Power (W)	Speed (RPM)	Air Flow (CFM)	Air Flow (m^3/min)	Air Pressure (mmH_2O)	Air Pressure (Inch H_2O)	Noise (dBA)
TRL17238B12SD.M	◎	12 (7.0~14.0)	1.10	13.20	2800	210.0	5.94	14.48	0.57	52.0
TRL17238B12D.M	◎	12 (7.0~14.0)	1.59	19.08	3200	245.0	6.93	18.54	0.73	56.0
TRL17238B12L.M	◎	12 (7.0~14.0)	2.34	28.08	3600	275.0	7.78	23.12	0.91	60.0
TRL17238B12M.M	◎	12 (7.0~14.0)	3.33	39.96	4000	310.0	8.77	28.45	1.12	64.0
TRL17238B24SD.M	◎	24 (15.0~27.0)	0.54	12.96	2800	210.0	5.94	14.48	0.57	52.0
TRL17238B24D.M	◎	24 (15.0~27.0)	0.78	18.72	3200	245.0	6.93	18.54	0.73	56.0
TRL17238B24L.M	◎	24 (15.0~27.0)	1.08	25.92	3600	275.0	7.78	23.12	0.91	60.0
TRL17238B24M.M	◎	24 (15.0~27.0)	1.38	33.12	4000	310.0	8.77	28.45	1.12	64.0
TRL17238B24H.M	◎	24 (15.0~27.0)	1.91	45.84	4400	340.0	9.62	33.53	1.32	68.0
TRL17238B24VH.M	◎	24 (15.0~57.0)	2.34	56.16	4800	360.0	10.19	39.12	1.54	72.0
TRL17238B48SD.M	◎	48 (35.0~57.0)	0.28	13.44	2800	210.0	5.94	14.48	0.57	52.0
TRL17238B48D.M	◎	48 (35.0~57.0)	0.37	17.76	3200	245.0	6.93	18.54	0.73	56.0
TRL17238B48L.M	◎	48 (35.0~57.0)	0.52	24.96	3600	275.0	7.78	23.12	0.91	60.0
TRL17238B48M.M	◎	48 (35.0~57.0)	0.68	32.64	4000	310.0	8.77	28.45	1.12	64.0
TRL17238B48H.M	◎	48 (35.0~57.0)	0.90	43.20	4400	340.0	9.62	33.53	1.32	68.0
TRL17238B48VH.M	◎	48 (35.0~57.0)	1.13	54.24	4800	360.0	10.19	39.12	1.54	72.0

X Bearing System ※：Sleeve ★：WRB ◎：Ball

★如果您需要的轉速或電壓或功能不在這份清單上，請與我們業務聯繫 Please contact us, if the SPEC you need is not in the list.

★產品詳細數據及功能請參閱承認書 Please see the approval sheet for more information . ★產品規格變更不另行通知 Specifications are subject to change without notice.

DC Axial Fan

TRS17251 SERIES 172X150X51mm

DIMENSIONS DRAWING UNIT：mm

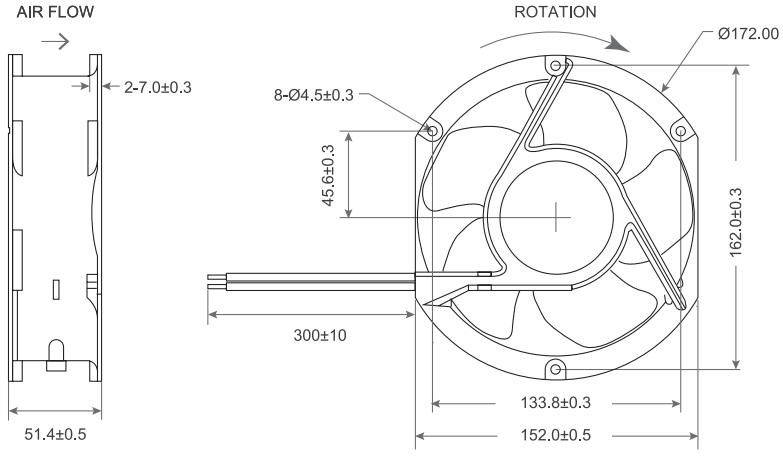

P&Q Curve At Rated Voltage

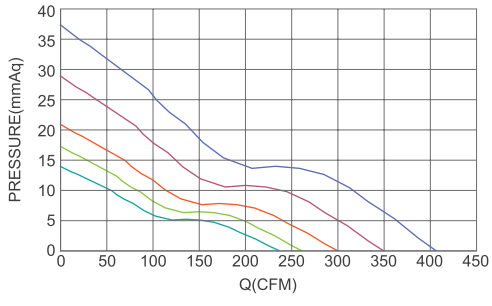

- Frame：Aluminum
  外框材質：鋁框
- Impeller：Thermoplastic PBT UL94-V0
  扇葉材質：環保防火PBT
- Bearing：※Sleeve・★WRB・◎Two Ball Bearing
  軸承：※含油・★WRB・◎滾珠軸承
- Unit Weight：760g
  風扇單體重量：760克

Model No.	Bearing Type	Voltage (VDC)	Current (A)	Power (W)	Speed (RPM)	Air Flow (CFM)	Air Flow (m^3/min)	Air Pressure (mmH_2O)	Air Pressure (Inch H_2O)	Noise (dBA)
TRS1751x12M	※◎★	12 (7.0~14.0)	1.16	13.92	3000	232.20	6.56	12.88	0.50	52.3
TRS1751x12H	※◎★	12 (7.0~14.0)	1.76	21.12	3500	269.65	7.62	17.38	0.68	56.6
TRS1751x12VH	※◎★	12 (7.0~14.0)	2.42	29.04	4000	307.11	8.68	22.54	0.88	60.5
TRS1751x24M	※◎★	24 (7.0~14.0)	0.58	13.92	3000	232.20	6.56	12.88	0.50	52.3
TRS1751x24H	※◎★	24 (15.0~27.0)	0.88	21.12	3500	269.65	7.62	17.38	0.68	56.6
TRS1751x24VH	※◎★	24 (15.0~27.0)	1.21	29.04	4000	299.62	8.48	21.46	0.84	60.5
TRS1751x24SH	※◎★	24 (15.0~27.0)	1.86	44.64	4500	344.56	9.74	28.37	1.11	62.3
TRS1751x24UH	※◎★	24 (15.0~27.0)	2.59	62.16	5000	400.79	11.34	37.06	1.46	67.1
TRS1751x48M	※◎★	48 (35.0~57.0)	0.29	13.92	3000	232.20	6.56	12.88	0.50	52.3
TRS1751x48H	※◎★	48 (35.0~57.0)	0.44	21.12	3500	269.65	7.62	17.38	0.68	56.6
TRS1751x48VH	※◎★	48 (35.0~57.0)	0.53	25.44	4000	299.62	8.48	21.46	0.84	60.5
TRS1751x48SH	※◎★	48 (35.0~57.0)	0.93	44.64	4500	344.56	9.74	28.37	1.11	62.3
TRS1751x48UH	※◎★	48 (35.0~57.0)	1.10	52.80	5000	400.79	11.34	37.06	1.46	67.1

(x) Bearing System ※：Sleeve ★：WRB ◎：Ball

★如果您需要的轉速或電壓或功能不在這份清單上，請與我們業務聯繫 Please contact us, if the SPEC you need is not in the list.

★產品詳細數據及功能請參閱承認書 Please see the approval sheet for more information . ★產品規格變更不另行通知 Specifications are subject to change without notice.

DC Axial Fan

TRS17251 B SERIES 172X150X51mm

DIMENSIONS DRAWING UNIT：mm

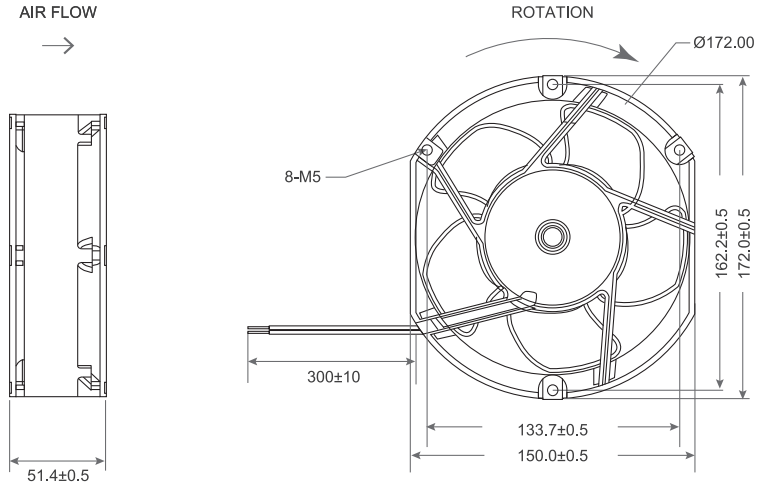

P&Q Curve At Rated Voltage

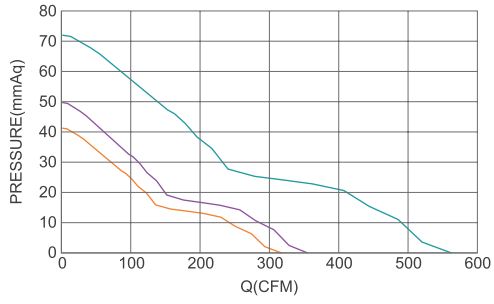

- ●Frame：Aluminum
  外框材質：鋁框
- ●Impeller：Thermoplastic PBT UL94-V0
  扇葉材質：環保防火PBT
- ●Bearing：※Sleeve・★WRB・◎Two Ball Bearing
  軸承：※含油・★WRB・◎滾珠軸承
- ●Unit Weight：720g
  風扇單體重量：720克

Model No.	Bearing Type	Voltage (VDC)	Current (A)	Power (W)	Speed (RPM)	Air Flow (CFM)	Air Flow (m^3/min)	Air Pressure (mmH2O)	Air Pressure (Inch H2O)	Noise (dBA)
TRS1751x12L	※◎★	12 (7.0~14.0)	1.50	18.00	4000	237.97	6.73	21.94	0.86	58.4
TRS1751x12M	※◎★	12 (7.0~14.0)	2.10	25.20	4500	267.71	7.57	27.77	1.09	60.8
TRS1751x12H	※◎★	12 (7.0~14.0)	2.72	32.64	5000	297.46	8.41	34.28	1.35	63.8
TRS1751x12VH	※◎★	12 (7.0~14.0)	3.62	43.44	5500	327.20	9.26	41.48	1.63	65.5
TRS1751x24L	※◎★	24 (15.0~27.0)	1.06	25.44	4000	237.97	6.73	21.94	0.86	58.4
TRS1751x24M	※◎★	24 (15.0~27.0)	1.18	28.32	4500	267.71	7.57	27.77	1.09	60.8
TRS1751x24H	※◎★	24 (15.0~27.0)	1.36	32.64	5000	297.46	8.41	34.28	1.35	63.8
TRS1751x24VH	※◎★	24 (15.0~27.0)	1.81	43.44	5500	327.20	9.26	41.48	1.63	65.5
TRS1751x24SH	※◎★	24 (15.0~27.0)	2.41	57.84	6000	356.95	10.10	49.36	1.94	68.7
TRD1751x24UH	※◎★	24 (15.0~57.0)	3.40	81.60	6500	479.11	13.55	53.41	2.10	71.6
TRS1751x48L	※◎★	48 (35.0~57.0)	0.38	18.00	4000	237.97	6.73	21.94	0.86	58.4
TRS1751x48M	※◎★	48 (35.0~57.0)	0.53	25.20	4500	267.71	7.57	27.77	1.09	60.8
TRS1751x48H	※◎★	48 (35.0~57.0)	0.68	32.64	5000	297.46	8.41	34.28	1.35	63.8
TRS1751x48VH	※◎★	48 (35.0~57.0)	0.91	43.44	5500	327.20	9.26	41.48	1.63	65.5
TRS1751x48SH	※◎★	48 (35.0~57.0)	1.20	57.84	6000	356.95	10.10	49.36	1.94	68.7
TRS1751x48UH	※◎★	48 (35.0~57.0)	2.87	137.76	6500	557.51	15.77	72.32	2.85	72.3

(x) Bearing System ※：Sleeve ★：WRB ◎：Ball

★如果您需要的轉速或電壓或功能不在這份清單上，請與我們業務聯繫 Please contact us, if the SPEC you need is not in the list.

★產品詳細數據及功能請參閱承認書 Please see the approval sheet for more information . ★產品規格變更不另行通知 Specifications are subject to change without notice.

DC Axial Fan

TRD17251 SERIES 172X150X51mm

DIMENSIONS DRAWING UNIT：mm

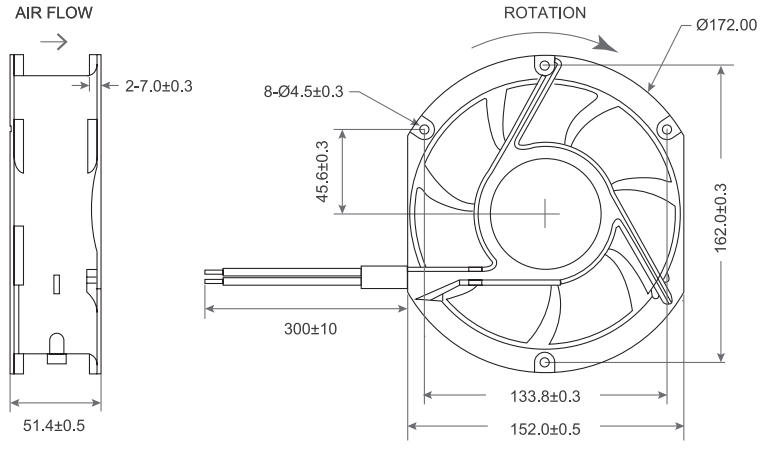

- Frame：Aluminum
  外框材質：鋁框
- Impeller：Thermoplastic PBT UL94-V0
  扇葉材質：環保防火PBT
- Bearing：※Sleeve・★WRB・◎Two Ball Bearing
  軸承：※含油・★WRB・◎滾珠軸承
- Unit Weight：760g
  風扇單體重量：760克

P&Q Curve At Rated Voltage

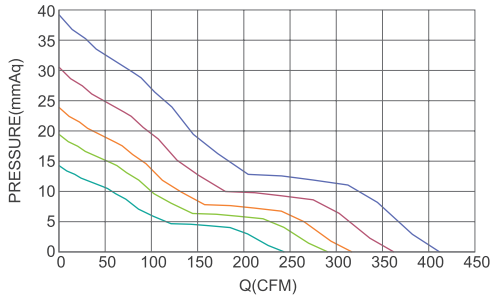

Model No.	Bearing Type	Voltage (VDC)	Current (A)	Power (W)	Speed (RPM)	Air Flow (CFM)	Air Flow (m^3/min)	Air Pressure (mmH_2O)	Air Pressure (Inch H_2O)	Noise (dBA)
TRD1751x12M	※◎★	12 (7.0~14.0)	1.58	18.96	3000	248.49	6.56	14.25	0.50	52.0
TRD1751x12H	※◎★	12 (7.0~14.0)	2.00	24.00	3500	288.57	7.62	19.12	0.68	57.5
TRD1751x12VH	※◎★	12 (7.0~14.0)	2.90	34.80	4000	328.65	8.68	24.92	0.88	60.8
TRD1751x24M	※◎★	24 (7.0~14.0)	0.79	18.96	3000	248.49	6.56	14.25	0.50	52.0
TRD1751x24H	※◎★	24 (15.0~27.0)	1.00	24.00	3500	288.57	7.62	19.12	0.68	57.5
TRD1751x24VH	※◎★	24 (15.0~27.0)	1.45	34.80	4000	320.63	9.07	23.72	0.93	60.8
TRD1751x24SH	※◎★	24 (15.0~27.0)	1.80	43.20	4500	360.71	10.20	30.02	1.18	64.7
TRD1751x24UH	※◎★	24 (15.0~27.0)	2.60	62.40	5000	408.80	10.80	38.56	1.37	67.1
TRD1751x48M	※◎★	48 (35.0~57.0)	0.40	19.20	3000	248.49	6.56	14.25	0.50	52.0
TRD1751x48H	※◎★	48 (35.0~57.0)	0.50	24.00	3500	288.57	7.62	19.13	0.68	57.5
TRD1751x48VH	※◎★	48 (35.0~57.0)	0.70	33.60	4000	320.63	9.07	23.72	0.93	60.8
TRD1751x48SH	※◎★	48 (35.0~57.0)	1.00	48.00	4500	360.71	10.20	30.02	1.18	64.7
TRD1751x48UH	※◎★	48 (35.0~57.0)	1.30	62.40	5000	408.80	10.80	38.56	1.37	67.1

(x) Bearing System ※：Sleeve ★：WRB ◎：Ball

★如果您需要的轉速或電壓或功能不在這份清單上，請與我們業務聯繫 Please contact us, if the SPEC you need is not in the list.

★產品詳細數據及功能請參閱承認書 Please see the approval sheet for more information . ★產品規格變更不另行通知 Specifications are subject to change without notice.

DC Axial Fan

TRL17251 SERIES 172X151X51mm

DIMENSIONS DRAWING UNIT：mm

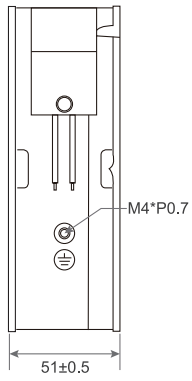

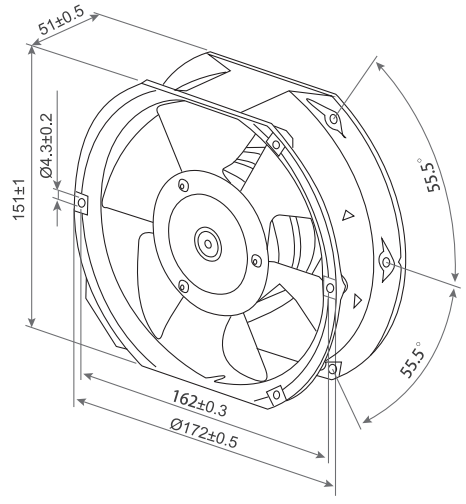

- Frame：Aluminum
  外框材質：鋁框
- Impeller：Thermoplastic PBT UL94-V0
  扇葉材質：環保防火PBT
- Bearing：◎Two Ball Bearing
  軸承：◎滾珠軸承
- Ingress Protection：Optional IP54 or IP56 or IP68
  防護等級：可選擇 IP54 or IP56 or IP68

P&Q Curve At Rated Voltage

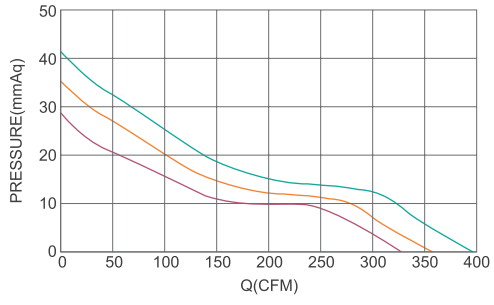

Model No.	Bearing Type	Voltage (VDC)	Current (A)	Power (W)	Speed (RPM)	Air Flow (CFM)	Air Flow (m^3/min)	Air Pressure (mmH₂O)	Air Pressure (Inch H₂O)	Noise (dBA)
TRL17251B12SD	◎	12 (7.0~14.0)	1.31	15.72	2800	220.0	6.23	14.48	0.57	64.0
TRL17251B12D	◎	12 (7.0~14.0)	1.88	22.56	3200	255.0	7.22	18.80	0.74	60.0
TRL17251B12L	◎	12 (7.0~14.0)	2.75	33.00	3600	290.0	8.21	23.62	0.93	56.0
TRL17251B12M	◎	12 (7.0~14.0)	3.73	44.76	4000	325.0	9.20	28.70	1.13	52.0
TRL17251B24SD	◎	24 (15.0~27.0)	0.65	15.60	2800	220.0	6.23	14.48	0.57	72.0
TRL17251B24D	◎	24 (15.0~27.0)	0.89	21.36	3200	255.0	7.22	18.80	0.74	68.0
TRL17251B24L	◎	24 (15.0~27.0)	1.21	29.04	3600	290.0	8.21	23.62	0.93	64.0
TRL17251B24M	◎	24 (15.0~27.0)	1.69	40.56	4000	325.0	9.20	28.70	1.13	60.0
TRL17251B24H	◎	24 (15.0~27.0)	2.41	57.84	4400	355.0	10.05	34.04	1.34	56.0
TRL17251B24SH	◎	24 (15.0~27.0)	2.94	70.56	4800	390.0	11.04	40.39	1.59	52.0
TRL17251B48SD	◎	48 (35.0~57.0)	0.33	15.84	2800	220.0	6.23	14.48	0.57	72.0
TRL17251B48D	◎	48 (35.0~57.0)	0.45	21.60	3200	255.0	7.22	18.80	0.74	68.0
TRL17251B48L	◎	48 (35.0~57.0)	0.60	28.80	3600	290.0	8.21	23.62	0.93	64.0
TRL17251B48M	◎	48 (35.0~57.0)	0.79	37.92	4000	325.0	9.20	28.70	1.13	60.0
TRL17251B48H	◎	48 (35.0~57.0)	1.15	55.20	4400	355.0	10.05	34.04	1.34	56.0
TRL17251B48VH	◎	48 (35.0~57.0)	1.48	71.04	4800	390.0	11.04	40.39	1.59	52.0

X Bearing System ※：Sleeve ★：WRB ◎：Ball

★如果您需要的轉速或電壓或功能不在這份清單上，請與我們業務聯繫 Please contact us, if the SPEC you need is not in the list.

★產品詳細數據及功能請參閱承認書 Please see the approval sheet for more information . ★產品規格變更不另行通知 Specifications are subject to change without notice.

DC Axial Fan

TRL17251 B SERIES 172X151X51mm

DIMENSIONS DRAWING UNIT：mm

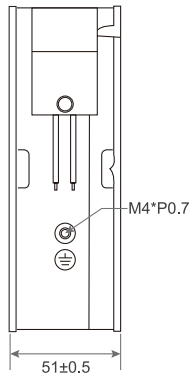

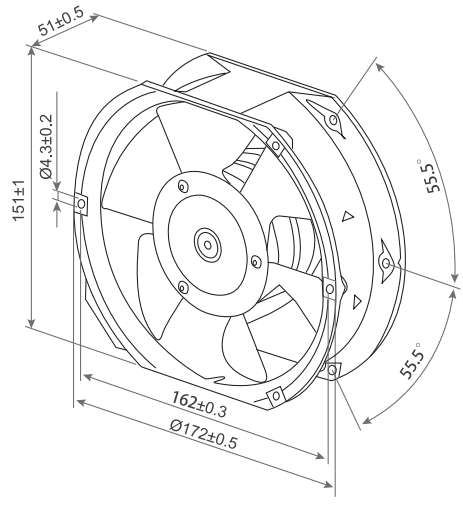

- Frame：Aluminum
  外框材質：鋁框
- Impeller：Metal
  扇葉材質：金屬葉
- Bearing：◎Two Ball Bearing
  軸承：◎滾珠軸承
- Ingress Protection：Optional IP54 or IP56 or IP68
  防護等級：可選擇 IP54 or IP56 or IP68

P&Q Curve At Rated Voltage

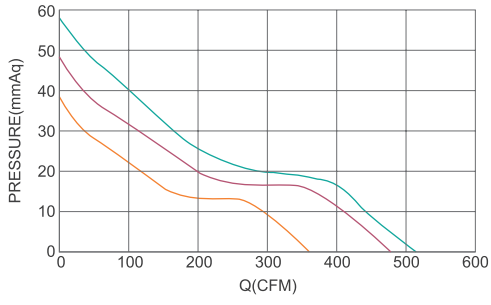

Model No.	Bearing Type	Voltage (VDC)	Current (A)	Power (W)	Speed (RPM)	Air Flow (CFM)	Air Flow (m^3/min)	Air Pressure (mmH2O)	Air Pressure (Inch H2O)	Noise (dBA)
TRL17251B12SD.M	◎	12 (7.0~14.0)	1.17	14.04	2800	210	5.95	14.22	0.56	52.0
TRL17251B12D.M	◎	12 (7.0~14.0)	1.60	19.20	3200	245	6.94	18.03	0.71	56.0
TRL17251B12L.M	◎	12 (7.0~14.0)	2.39	28.68	3600	275	7.79	22.61	0.89	60.0
TRL17251B12M.M	◎	12 (7.0~14.0)	2.76	33.12	4000	310	8.78	27.94	1.10	64.0
TRL17251B24SD.M	◎	24 (15.0~27.0)	0.56	13.44	2800	210	5.95	14.22	0.56	52.0
TRL17251B24D.M	◎	24 (15.0~27.0)	0.77	18.48	3200	245	6.94	18.03	0.71	56.0
TRL17251B24L.M	◎	24 (15.0~27.0)	1.07	25.68	3600	275	7.79	22.61	0.89	60.0
TRL17251B24M.M	◎	24 (15.0~27.0)	1.38	33.12	4000	310	8.78	27.94	1.10	64.0
TRL17251B24H.M	◎	24 (15.0~27.0)	1.80	43.20	4400	340	9.63	33.02	1.30	68.0
TRL17251B24VH.M	◎	24 (15.0~57.0)	2.30	55.20	4800	360	10.19	37.85	1.49	72.0
TRL17251B48SD.M	◎	48 (35.0~57.0)	0.28	13.44	2800	210	5.95	14.22	0.56	52.0
TRL17251B48D.M	◎	48 (35.0~57.0)	0.39	18.72	3200	245	6.94	18.03	0.71	56.0
TRL17251B48L.M	◎	48 (35.0~57.0)	0.51	24.48	3600	275	7.79	22.61	0.89	60.0
TRL17251B48M.M	◎	48 (35.0~57.0)	0.69	33.12	4000	310	8.78	27.94	1.10	64.0
TRL17251B48H.M	◎	48 (35.0~57.0)	0.90	43.20	4400	340	9.63	33.02	1.30	68.0
TRL17251B48VH.M	◎	48 (35.0~57.0)	1.18	56.64	4800	360	10.19	37.85	1.49	72.0
TRL17251B48SH.M	◎	48 (35.0~57.0)	2.05	98.40	5800	437	12.37	48.51	1.91	73.0
TRL17251B48XH.M	◎	48 (35.0~57.0)	3.30	158.40	6800	507	14.35	57.15	2.25	75.0

X Bearing System ※：Sleeve ★：WRB ◎：Ball

★如果您需要的轉速或電壓或功能不在這份清單上，請與我們業務聯繫 Please contact us, if the SPEC you need is not in the list.

★產品詳細數據及功能請參閱承認書 Please see the approval sheet for more information . ★產品規格變更不另行通知 Specifications are subject to change without notice.

DC Axial Fan

TRL17251 UB SERIES 172x150x51mm

- Frame：Aluminum
  外框材質：鋁框
- Impeller：Thermoplastic PBT UL94-V0
  扇葉材質：環保防火PBT
- Bearing：※Sleeve・★WRB・◎Two Ball
  軸承：※含油・★WRB・◎滾珠軸承
- Unit Weight：817g
  風扇單體重量：817克

P&Q Curve | At Rated Voltage

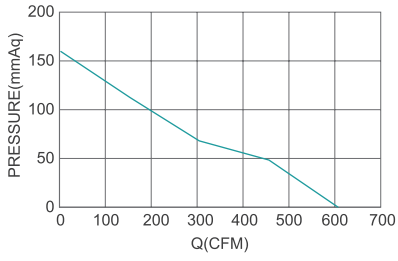

DIMENSIONS DRAWING | UNIT：mm

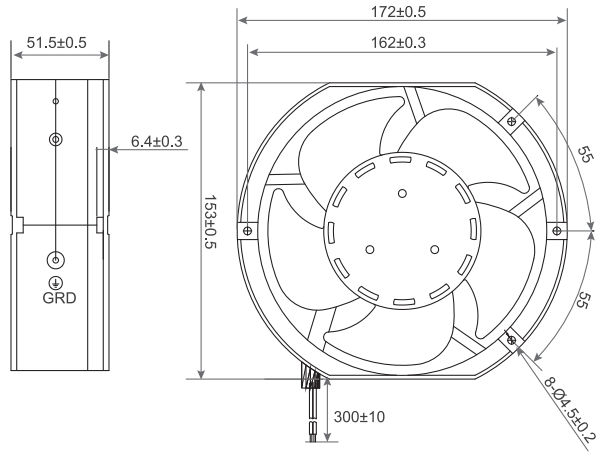

Model No.	Bearing Type	Voltage (VDC)	Current (A)	Power (W)	Speed (RPM)	Air Flow (CFM)	Air Flow (m^3/min)	Air Pressure (mmH₂O)	Air Pressure (Inch H₂O)	Noise (dBA)
TRL1751B12H	※◎★	12 (7.0~13.5)	14.0	168.0	9500	603.2	17.07	158.02	6.22	70.0
TRL1751B24H	※◎★	24 (18.0~26.5)	7.0	168.0	9500	603.2	17.07	158.02	6.22	70.0
TRL1751B48H	※◎★	48 (36.0~54.0)	3.5	168.0	9500	603.2	17.07	158.02	6.22	70.0

DC Axial Fan

TRL17Ø51 U SERIES Ø172X51mm

- Frame：Aluminum
  外框材質：鋁框
- Impeller：Thermoplastic PBT UL94-V0
  扇葉材質：環保防火PBT
- Bearing：◎Two Ball bearing
  軸承：◎滾珠軸承
- Unit Weight：900g
  風扇單體重量：900克

P&Q Curve | At Rated Voltage

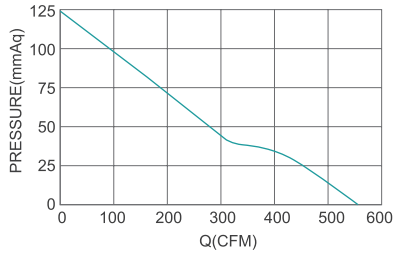

DIMENSIONS DRAWING | UNIT：mm

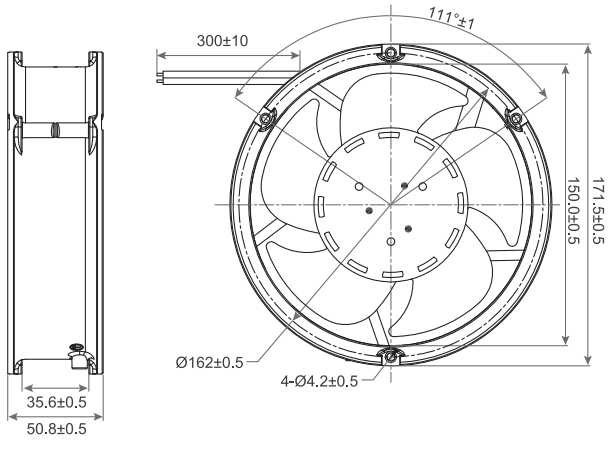

Model No.	Bearing Type	Voltage (VDC)	Current (A)	Power (W)	Speed (RPM)	Air Flow (CFM)	Air Flow (m^3/min)	Air Pressure (mmH₂O)	Air Pressure (Inch H₂O)	Noise (dBA)
TRL17Ø51x48H	◎	48 (36.0~54.0)	3.2	153.6	9500	554.6	15.70	122.10	4.81	80.2

(X) Bearing System ※：Sleeve ★：WRB ◎：Ball

★如果您需要的轉速或電壓或功能不在這份清單上，請與我們業務聯繫 Please contact us, if the SPEC you need is not in the list.

★產品詳細數據及功能請參閱承認書 Please see the approval sheet for more information . ★產品規格變更不另行通知 Specifications are subject to change without notice.

DC Axial Fan

TRL172Ø51 SERIES Ø172X51mm

DIMENSIONS DRAWING UNIT：mm

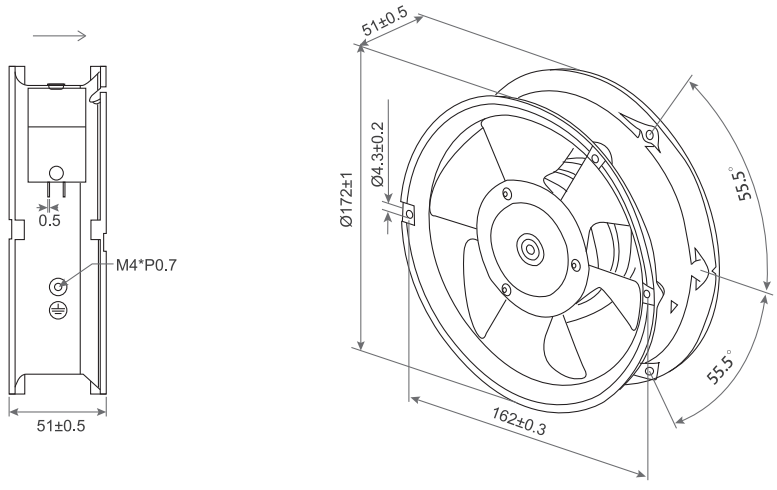

- Frame：Aluminum
  外框材質：鋁框
- Impeller：Thermoplastic PBT UL94-V0
  扇葉材質：環保防火PBT
- Bearing：◎Two Ball Bearing
  軸承：◎滾珠軸承
- Ingress Protection：Optional IP54 or IP56 or IP68
  防護等級：可選擇 IP54 or IP56 or IP68

P&Q Curve At Rated Voltage

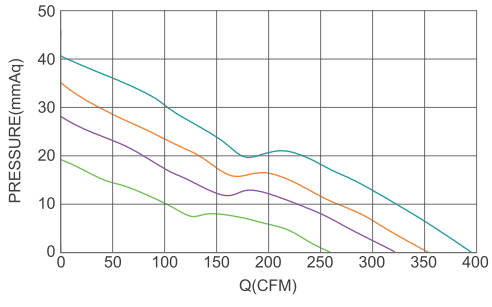

Model No.	Bearing Type	Voltage (VDC)	Current (A)	Power (W)	Speed (RPM)	Air Flow (CFM)	Air Flow (m^3/min)	Air Pressure (mmH2O)	Air Pressure (Inch H2O)	Noise (dBA)
TRL17Ø51B12SD	◎	12	1.31	15.72	2800	220.0	6.23	14.5	0.57	52.0
TRL17Ø51B12D	◎	12	1.88	22.56	3200	255.0	7.22	18.8	0.74	56.0
TRL17Ø51B12L	◎	12	2.75	33.00	3600	290.0	8.21	23.6	0.93	60.0
TRL17Ø51B12M	◎	12	3.73	44.76	4000	325.0	9.20	28.7	1.13	64.0
TRL17Ø51B24SD	◎	24	0.65	15.60	2800	220.0	6.23	14.5	0.57	52.0
TRL17Ø51B24D	◎	24	0.89	21.36	3200	255.0	7.22	18.8	0.74	56.0
TRL17Ø51B24L	◎	24	1.21	29.04	3600	290.0	8.21	23.6	0.93	60.0
TRL17Ø51B24M	◎	24	1.69	40.56	4000	325.0	9.20	28.7	1.13	64.0
TRL17Ø51B24H	◎	24	2.41	57.84	4400	355.0	10.05	34.0	1.34	68.0
TRL17Ø51B24VH	◎	24	2.94	70.56	4800	390.0	11.04	40.4	1.59	72.0
TRL17Ø51B48SD	◎	48	0.33	15.84	2800	220.0	6.23	14.5	0.57	52.0
TRL17Ø51B48D	◎	48	0.45	21.60	3200	255.0	7.22	18.8	0.74	56.0
TRL17Ø51B48L	◎	48	0.60	28.80	3600	290.0	8.21	23.6	0.93	60.0
TRL17Ø51B48M	◎	48	0.79	37.92	4000	325.0	9.20	28.7	1.13	64.0
TRL17Ø51B48H	◎	48	1.15	55.20	4400	355.0	10.05	34.0	1.34	68.0
TRL17Ø51B48VH	◎	48	1.48	71.04	4800	390.0	11.04	40.4	1.59	72.0

X Bearing System ※：Sleeve ★：WRB ◎：Ball

★如果您需要的轉速或電壓或功能不在這份清單上，請與我們業務聯繫 Please contact us, if the SPEC you need is not in the list.

★產品詳細數據及功能請參閱承認書 Please see the approval sheet for more information . ★產品規格變更不另行通知 Specifications are subject to change without notice.

DC Axial Fan

TRL172Ø51 B SERIES Ø172X51mm

DIMENSIONS DRAWING UNIT：mm

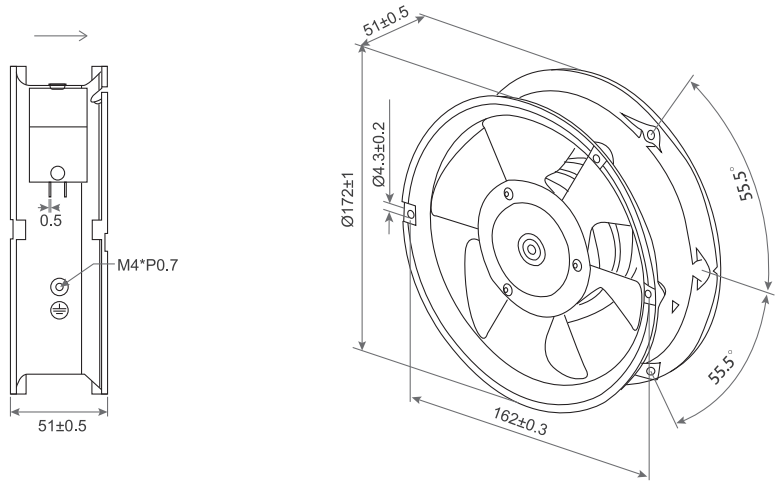

- Frame：Aluminum
  外框材質：鋁框
- Impeller：Metal
  扇葉材質：金屬葉
- Bearing：◎Two Ball Bearing
  軸承：◎滾珠軸承
- Ingress Protection：Optional IP54 or IP56 or IP68
  防護等級：可選擇 IP54 or IP56 or IP68

P&Q Curve At Rated Voltage

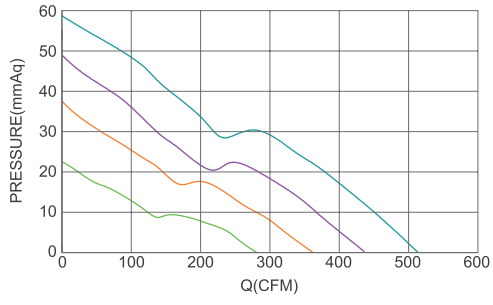

Model No.	Bearing Type	Voltage (VDC)	Current (A)	Power (W)	Speed (RPM)	Air Flow (CFM)	Air Flow (m^3/min)	Air Pressure (mmH2O)	Air Pressure (Inch H2O)	Noise (dBA)
TRL17Ø51B12SD.M	◎	12	1.17	14.04	2800	210.0	5.95	14.2	0.56	52.0
TRL17Ø51B12D.M	◎	12	1.60	19.20	3200	245.0	6.94	18.0	0.71	56.0
TRL17Ø51B12L.M	◎	12	2.39	28.68	3600	275.0	7.79	22.6	0.89	60.0
TRL17Ø51B12M.M	◎	12	2.76	33.12	4000	310.0	8.78	27.9	1.10	64.0
TRL17Ø51B24SD.M	◎	24	0.56	13.44	2800	210.0	5.95	14.2	0.56	52.0
TRL17Ø51B24D.M	◎	24	0.77	18.48	3200	245.0	6.94	18.0	0.71	56.0
TRL17Ø51B24L.M	◎	24	1.07	25.68	3600	275.0	7.79	22.6	0.89	60.0
TRL17Ø51B24M.M	◎	24	1.38	33.12	4000	310.0	8.78	27.9	1.10	64.0
TRL17Ø51B24H.M	◎	24	1.80	43.20	4400	340.0	9.63	33.0	1.30	68.0
TRL17Ø51B24VH.M	◎	24	2.30	55.20	4800	360.0	10.19	37.8	1.49	72.0
TRL17Ø51B48SD.M	◎	48	0.28	13.44	2800	210.0	5.95	14.2	0.56	52.0
TRL17Ø51B48D.M	◎	48	0.39	18.72	3200	245.0	6.94	18.0	0.71	56.0
TRL17Ø51B48L.M	◎	48	0.51	24.48	3600	275.0	7.79	22.6	0.89	60.0
TRL17Ø51B48M.M	◎	48	0.69	33.12	4000	310.0	8.78	27.9	1.10	64.0
TRL17Ø51B48H.M	◎	48	0.90	43.20	4400	340.0	9.63	33.0	1.30	68.0
TRL17Ø51B48VH.M	◎	48	1.18	56.64	4800	360.0	10.19	37.8	1.49	72.0
TRL17Ø51B48SH.M	◎	48	2.05	98.40	5800	437.0	12.37	48.5	1.91	73.0
TRL17Ø51B48XH.M	◎	48	3.30	158.40	6800	507.0	14.35	57.2	2.25	75.0

X Bearing System ※：Sleeve ★：WRB ◎：Ball

★如果您需要的轉速或電壓或功能不在這份清單上，請與我們業務聯繫 Please contact us, if the SPEC you need is not in the list.

★產品詳細數據及功能請參閱承認書 Please see the approval sheet for more information . ★產品規格變更不另行通知 Specifications are subject to change without notice.

DC Axial Fan

TRL15155 SERIES 172X151X55mm

DIMENSIONS DRAWING UNIT：mm

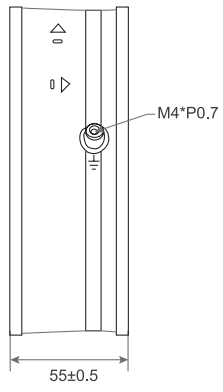

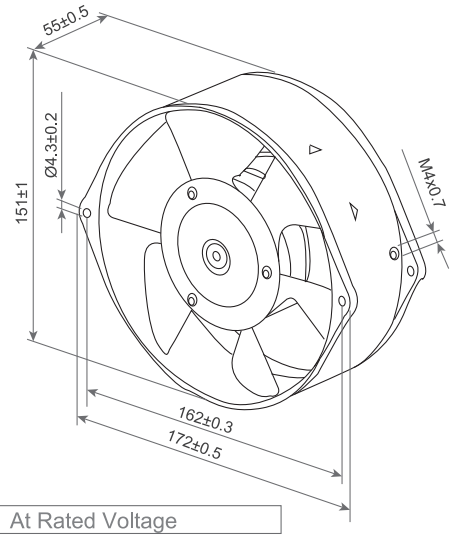

- Frame：Aluminum
  外框材質：鋁框
- Impeller：Thermoplastic PBT UL94-V0
  扇葉材質：環保防火PBT
- Bearing：◎Two Ball Bearing
  軸承：◎滾珠軸承
- Ingress Protection：Optional IP54 or IP56 or IP68
  防護等級：可選擇 IP54 or IP56 or IP68

P&Q Curve At Rated Voltage

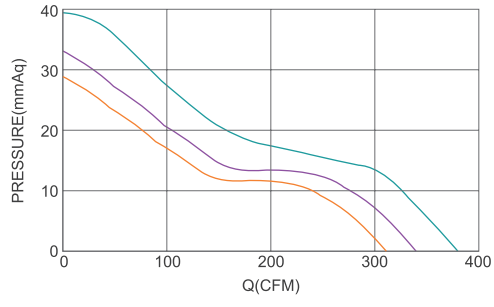

Model No.	Bearing Type	Voltage (VDC)	Current (A)	Power (W)	Speed (RPM)	Air Flow (CFM)	Air Flow (m^3/min)	Air Pressure (mmH_2O)	Air Pressure (Inch H_2O)	Noise (dBA)
TRL15155B12SD	◎	12	1.31	15.72	2800	205.0	5.80	14.0	0.55	53.0
TRL15155B12D	◎	12	1.88	22.56	3200	240.0	6.79	18.3	0.72	57.0
TRL15155B12L	◎	12	2.75	33.00	3600	275.0	7.79	22.9	0.90	61.0
TRL15155B12M	◎	12	3.73	44.76	4000	310.0	8.78	28.2	1.11	65.0
TRL15155B24SD	◎	24	0.65	15.60	2800	205.0	5.80	14.0	0.55	53.0
TRL15155B24D	◎	24	0.89	21.36	3200	240.0	6.79	18.3	0.72	57.0
TRL15155B24L	◎	24	1.21	29.04	3600	275.0	7.79	22.9	0.90	61.0
TRL15155B24M	◎	24	1.69	40.56	4000	310.0	8.78	28.2	1.11	65.0
TRL15155B24H	◎	24	2.41	57.84	4400	340.0	9.63	33.5	1.32	69.0
TRL15155B24VH	◎	24	2.94	70.56	4800	375.0	10.62	39.6	1.56	73.0
TRL15155B48SD	◎	48	0.33	15.84	2800	205.0	5.80	5.6	0.22	53.0
TRL15155B48D	◎	48	0.45	21.60	3200	240.0	6.79	18.3	0.72	57.0
TRL15155B48L	◎	48	0.6	28.80	3600	275.0	7.79	22.9	0.90	61.0
TRL15155B48M	◎	48	0.79	37.92	4000	310.0	8.78	28.2	1.11	65.0
TRL15155B48H	◎	48	1.15	55.20	4400	340.0	9.63	33.5	1.32	69.0
TRL15155B48VH	◎	48	1.48	71.04	4800	375.0	10.62	39.6	1.56	73.0

X Bearing System ※：Sleeve ★：WRB ◎：Ball

★如果您需要的轉速或電壓或功能不在這份清單上，請與我們業務聯繫 Please contact us, if the SPEC you need is not in the list.

★產品詳細數據及功能請參閱承認書 Please see the approval sheet for more information . ★產品規格變更不另行通知 Specifications are subject to change without notice.

DC Axial Fan

TRL15155 B SERIES 172X151X55mm

DIMENSIONS DRAWING UNIT：mm

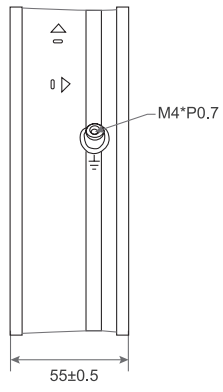

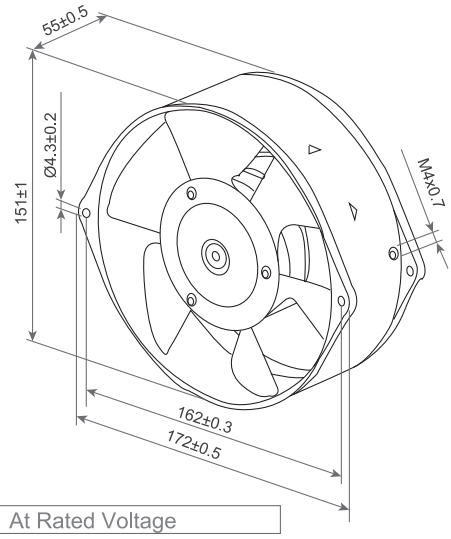

- Frame：Aluminum
  外框材質：鋁框
- Impeller：Metal
  扇葉材質：金屬葉
- Bearing：◎Two Ball Bearing
  軸承：◎滾珠軸承
- Ingress Protection：Optional IP54 or IP56 or IP68
  防護等級：可選擇 IP54 or IP56 or IP68

P&Q Curve At Rated Voltage

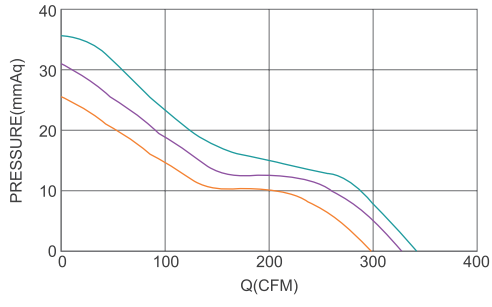

Model No.	Bearing Type	Voltage (VDC)	Current (A)	Power (W)	Speed (RPM)	Air Flow (CFM)	Air Flow (m^3/min)	Air Pressure (mmH2O)	Air Pressure (Inch H2O)	Noise (dBA)
TRL15155B12SD.M	◎	12	1.17	14.04	2800	195.0	5.52	12.2	0.48	59.0
TRL15155B12D.M	◎	12	1.60	19.20	3200	230.0	6.51	16.0	0.63	62.0
TRL15155B12L.M	◎	12	2.39	28.68	3600	260.0	7.36	20.6	0.81	65.0
TRL15155B12M.M	◎	12	2.76	33.12	4000	295.0	8.35	25.7	1.01	68.0
TRL15155B24SD.M	◎	24	0.56	13.44	2800	195.0	5.52	12.2	0.48	59.0
TRL15155B24D.M	◎	24	0.77	18.48	3200	230.0	6.51	16.0	0.63	62.0
TRL15155B24L.M	◎	24	1.07	25.68	3600	260.0	7.36	20.6	0.81	65.0
TRL15155B24M.M	◎	24	1.38	33.12	4000	295.0	8.35	25.7	1.01	68.0
TRL15155B24H.M	◎	24	1.80	43.20	4400	325.0	9.20	30.7	1.21	71.0
TRL15155B24VH.M	◎	24	2.30	55.20	4800	345.0	9.77	35.8	1.41	74.0
TRL15155B48SD.M	◎	48	0.28	13.44	2800	195.0	5.52	12.2	0.48	59.0
TRL15155B48D.M	◎	48	0.39	18.72	3200	230.0	6.51	16.0	0.63	62.0
TRL15155B48L.M	◎	48	0.51	24.48	3600	260.0	7.36	20.6	0.81	65.0
TRL15155B48M.M	◎	48	0.69	33.12	4000	295.0	8.35	25.7	1.01	68.0
TRL15155B48H.M	◎	48	0.90	43.20	4400	325.0	9.20	30.7	1.21	71.0
TRL15155B48VH.M	◎	48	1.18	56.64	4800	345.0	9.77	35.8	1.41	74.0

X Bearing System ※：Sleeve ★：WRB ◎：Ball

★如果您需要的轉速或電壓或功能不在這份清單上，請與我們業務聯繫 Please contact us, if the SPEC you need is not in the list.

★產品詳細數據及功能請參閱承認書 Please see the approval sheet for more information . ★產品規格變更不另行通知 Specifications are subject to change without notice.

DC Axial Fan

TRS20053 SERIES 200X200X53mm

DIMENSIONS DRAWING UNIT：mm

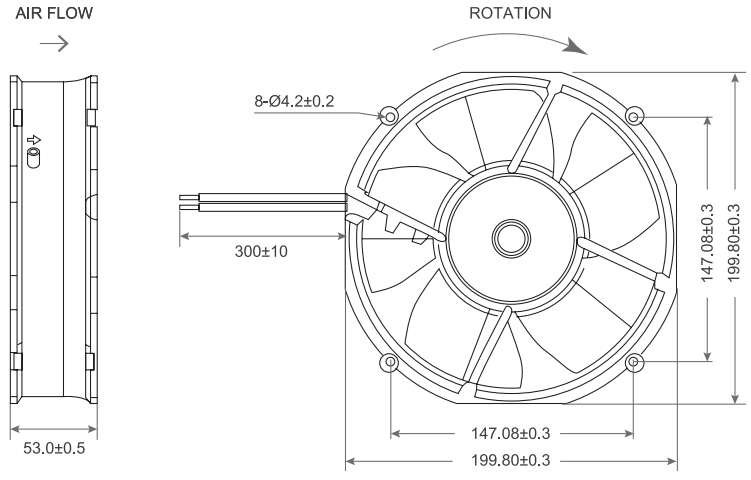

- Frame：Aluminum
  外框材質：鋁框
- Impeller：Thermoplastic PBT UL94-V0
  扇葉材質：環保防火PBT
- Bearing：※Sleeve・★WRB・◎Two Ball Bearing
  軸承：※含油・★WRB・◎滾珠軸承
- Unit Weight：1300g
  風扇單體重量：1300克

P&Q Curve At Rated Voltage

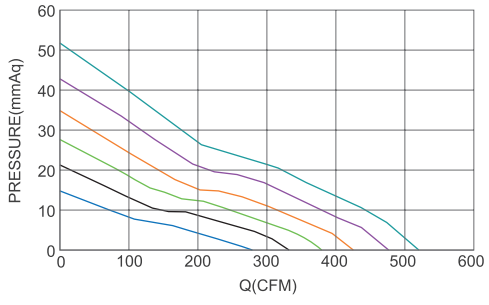

Model No.	Bearing Type	Voltage (VDC)	Current (A)	Power (W)	Speed (RPM)	Air Flow (CFM)	Air Flow (m^3/min)	Air Pressure (mmH_2O)	Air Pressure (Inch H_2O)	Noise (dBA)
TRS20053B12D	※◎★	12 (7.0~14.0)	1.55	18.50	3000	283.32	8.01	15.48	0.61	56.5
TRS20053B12L	※◎★	12 (7.0~14.0)	2.00	24.00	3500	330.54	9.53	21.07	0.83	60.1
TRS20053B12M	※◎★	12 (7.0~14.0)	2.70	32.40	4000	377.76	10.69	27.52	1.08	63.4
TRS20053B12H	※◎★	12 (7.0~14.0)	3.50	41.50	4500	424.98	12.02	34.83	1.37	66.7
TRS20053B24D	※◎★	24 (15.0~27.0)	0.77	18.50	3000	283.32	8.01	15.48	0.61	56.5
TRS20053B24L	※◎★	24 (15.0~27.0)	1.00	24.00	3500	330.54	9.53	21.07	0.83	60.1
TRS20053B24M	※◎★	24 (15.0~27.0)	1.50	36.00	4000	377.76	10.69	27.52	1.08	63.4
TRS20053B24H	※◎★	24 (15.0~27.0)	1.73	41.50	4500	424.98	12.02	34.83	1.37	66.7
TRS20053B24VH	※◎★	24 (15.0~27.0)	2.23	53.50	5000	472.20	13.36	43.00	1.69	68.5
TRS20053B24SH	※◎★	24 (15.0~27.0)	2.87	68.90	5500	519.42	14.69	52.30	2.05	71.9
TRS20053B48D	※◎★	48 (35.0~57.0)	0.39	18.50	3000	283.32	8.01	15.48	0.61	56.5
TRS20053B48L	※◎★	48 (35.0~57.0)	0.50	24.00	3500	330.54	9.53	21.07	0.83	60.1
TRS20053B48M	※◎★	48 (35.0~57.0)	0.68	32.40	4000	377.76	10.69	27.52	1.08	63.4
TRS20053B48H	※◎★	48 (35.0~57.0)	0.86	41.50	4500	424.98	12.02	34.83	1.37	66.7
TRS20053B48VH	※◎★	48 (35.0~57.0)	1.12	53.50	5000	472.20	13.36	43.00	1.69	68.5
TRS20053B48SH	※◎★	48 (35.0~57.0)	1.43	68.90	5500	519.42	14.69	52.30	2.05	71.9

X Bearing System ※：Sleeve ★：WRB ◎：Ball

★如果您需要的轉速或電壓或功能不在這份清單上，請與我們業務聯繫 Please contact us, if the SPEC you need is not in the list.

★產品詳細數據及功能請參閱承認書 Please see the approval sheet for more information . ★產品規格變更不另行通知 Specifications are subject to change without notice.

DC Axial Fan

TRS20060 SERIES 200X200X60mm

DIMENSIONS DRAWING UNIT：mm

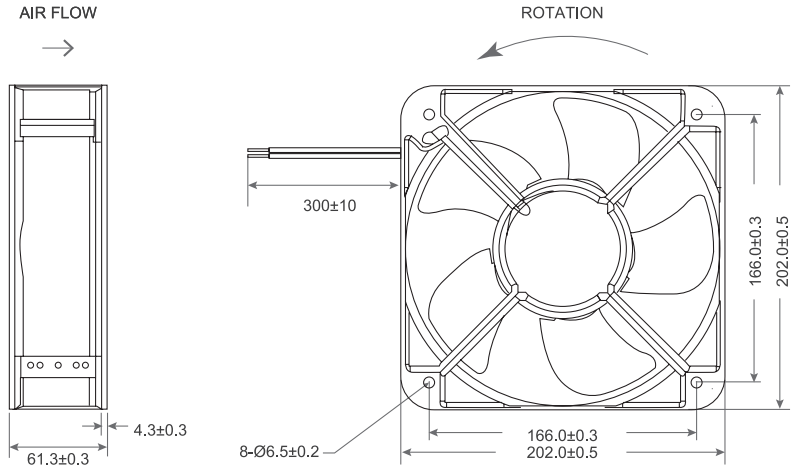

- Frame：Aluminum
  外框材質：鋁框
- Impeller：Thermoplastic PBT UL94-V0
  扇葉材質：環保防火PBT
- Bearing：※Sleeve・★WRB・◎Two Ball Bearing
  軸承：※含油・★WRB・◎滾珠軸承
- Unit Weight：1250g
  風扇單體重量：1250克

P&Q Curve At Rated Voltage

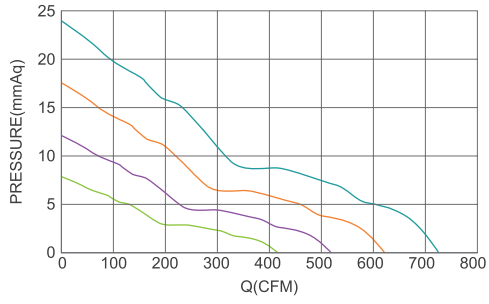

Model No.	Bearing Type	Voltage (VDC)	Current (A)	Power (W)	Speed (RPM)	Air Flow (CFM)	Air Flow (m^3/min)	Air Pressure (mmH2O)	Air Pressure (Inch H2O)	Noise (dBA)
TRS20060x12L	※◎★	12 (7.0~14.0)	0.75	9.00	1500	307.65	8.71	4.37	0.17	44.5
TRS20060x12M	※◎★	12 (7.0~14.0)	1.16	13.92	2000	410.21	11.61	7.77	0.31	52.3
TRS20060x12H	※◎★	12 (7.0~14.0)	2.24	26.88	2500	512.76	14.51	12.14	0.48	58.6
TRS20060x24L	※◎★	24 (15.0~27.0)	0.28	6.72	1500	307.65	8.71	4.37	0.17	44.5
TRS20060x24M	※◎★	24 (15.0~27.0)	0.58	13.92	2000	410.21	11.61	7.77	0.31	52.3
TRS20060x24H	※◎★	24 (15.0~27.0)	1.10	26.40	2500	512.76	14.51	12.14	0.48	58.6
TRS20060x24VH	※◎★	24 (15.0~27.0)	2.10	50.40	3000	615.31	17.41	17.48	0.69	64.8
TRS20060x24SH	※◎★	24 (15.0~27.0)	3.43	80.16	3500	717.86	20.32	23.80	0.94	69.1
TRS20060x48L	※◎★	48 (35.0~57.0)	0.14	6.72	1500	307.65	8.71	4.37	0.17	44.5
TRS20060x48M	※◎★	48 (35.0~57.0)	0.29	13.92	2000	410.21	11.61	7.77	0.31	52.3
TRS20060x48H	※◎★	48 (35.0~57.0)	0.56	26.88	2500	512.76	14.51	12.14	0.48	58.6
TRS20060x48VH	※◎★	48 (35.0~57.0)	1.05	50.40	3000	615.31	17.41	17.48	0.69	64.8
TRS20060x48SH	※◎★	48 (35.0~57.0)	1.56	74.88	3500	717.86	20.32	23.80	0.94	69.1

x Bearing System ※：Sleeve ★：WRB ◎：Ball

★如果您需要的轉速或電壓或功能不在這份清單上，請與我們業務聯繫 Please contact us, if the SPEC you need is not in the list.

★產品詳細數據及功能請參閱承認書 Please see the approval sheet for more information . ★產品規格變更不另行通知 Specifications are subject to change without notice.

DC Axial Fan

TRS20070 SERIES 200X200X70mm

DIMENSIONS DRAWING UNIT：mm

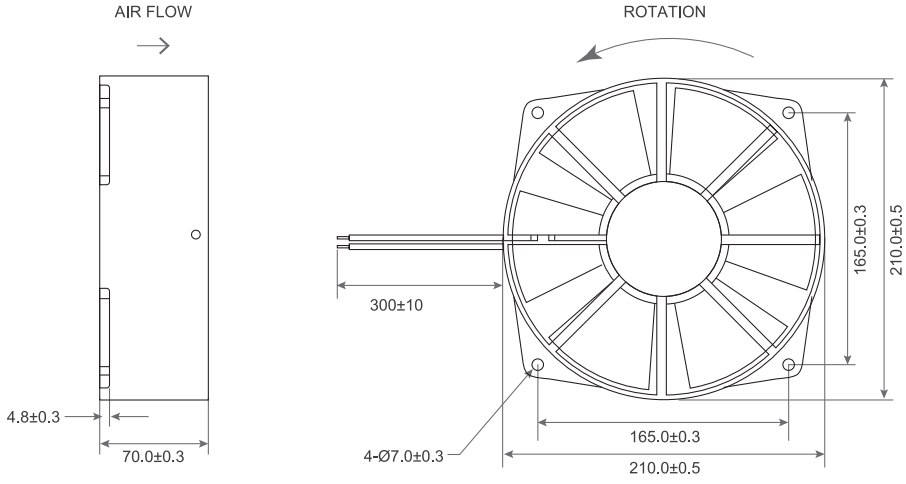

- Frame：Aluminum
  外框材質：鋁框
- Impeller：Thermoplastic PBT UL94-V0
  扇葉材質：環保防火PBT
- Bearing：※Sleeve・★WRB・◎Two Ball Bearing
  軸承：※含油・★WRB・◎滾珠軸承
- Unit Weight：1400g
  風扇單體重量：1400克

P&Q Curve At Rated Voltage

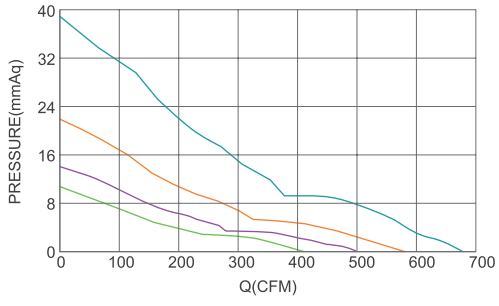

Model No.	Bearing Type	Voltage (VDC)	Current (A)	Power (W)	Speed (RPM)	Air Flow (CFM)	Air Flow (m^3/min)	Air Pressure (mmH_2O)	Air Pressure (Inch H_2O)	Noise (dBA)
TRS20070x12D	※◎★	12 (7.0~14.0)	0.70	8.40	1800	319.37	9.04	5.38	0.21	55.5
TRS20070x12L	※◎★	12 (7.0~14.0)	1.45	17.40	2300	408.08	11.55	8.79	0.35	62.7
TRS20070x12M	※◎★	12 (7.0~14.0)	2.40	28.80	2800	496.80	14.06	13.02	0.51	67.5
TRS20070x24D	※◎★	24 (15.0~27.0)	0.35	8.40	1800	319.37	9.04	5.38	0.21	55.5
TRS20070x24L	※◎★	24 (15.0~27.0)	0.72	17.28	2300	408.08	11.55	8.79	0.35	62.7
TRS20070x24M	※◎★	24 (15.0~27.0)	1.11	25.92	2800	496.80	14.06	13.02	0.51	67.5
TRS20070x24H	※◎★	24 (15.0~27.0)	1.95	46.80	3300	585.51	18.09	29.14	1.15	69.1
TRS20070x24VH	※◎★	24 (15.0~27.0)	3.20	76.80	3800	674.22	23.99	38.64	1.52	71.7
TRS20070x48D	※◎★	48 (35.0~57.0)	0.18	8.64	1800	319.37	9.04	5.38	0.21	55.5
TRS20070x48L	※◎★	48 (35.0~57.0)	0.36	17.28	2300	408.08	11.55	8.79	0.35	62.7
TRS20070x48M	※◎★	48 (35.0~57.0)	0.60	28.80	2800	496.80	14.06	13.02	0.51	67.5
TRS20070x48H	※◎★	48 (35.0~57.0)	1.00	48.00	3300	585.51	16.57	29.14	1.15	71.7
TRS20070x48VH	※◎★	48 (35.0~57.0)	1.60	76.80	3800	674.22	19.08	38.64	1.52	69.1

X Bearing System ※：Sleeve ★：WRB ◎：Ball

★如果您需要的轉速或電壓或功能不在這份清單上，請與我們業務聯繫 Please contact us, if the SPEC you need is not in the list.

★產品詳細數據及功能請參閱承認書 Please see the approval sheet for more information . ★產品規格變更不另行通知 Specifications are subject to change without notice.

DC Axial Fan

TRS22030 SERIES 220X220X30mm

DIMENSIONS DRAWING UNIT：mm

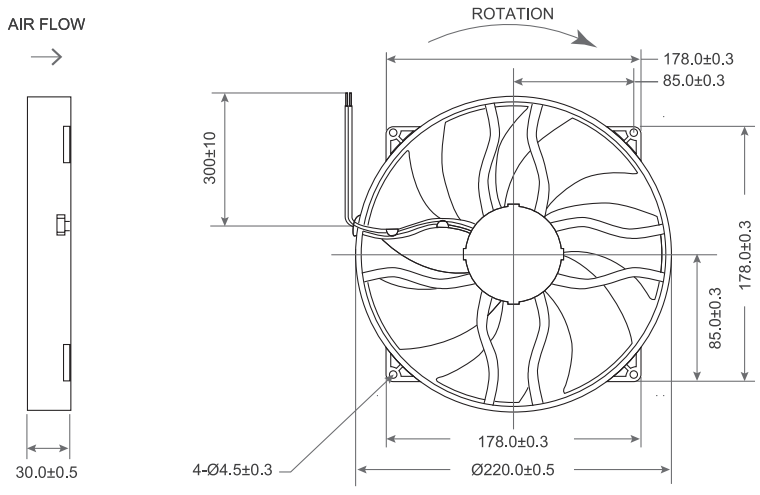

- ●Frame：PC UL94-V0
  外框材質：聚碳酸酯
- ●Impeller：PC UL94-V0
  扇葉材質：聚碳酸酯
- ●Bearing：※Sleeve・★WRB・◎Two Ball Bearing
  軸承：※含油・★WRB・◎滾珠軸承
- ●Unit Weight：250g
  風扇單體重量：250克

P&Q Curve At Rated Voltage

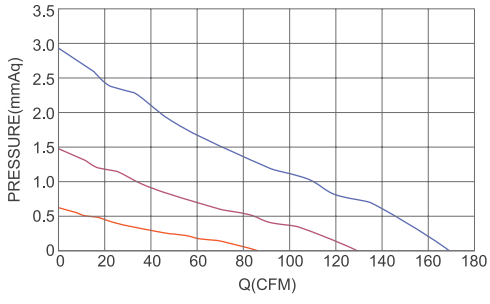

Model No.	Bearing Type	Voltage (VDC)	Current (A)	Power (W)	Speed (RPM)	Air Flow (CFM)	Air Flow (m^3/min)	Air Pressure (mmH2O)	Air Pressure (Inch H2O)	Noise (dBA)
TRS2230x12L	※◎★	12 (7.0~14.0)	0.37	4.32	800	85.60	2.42	0.65	0.03	28.5
TRS2230x12M	※◎★	12 (7.0~14.0)	0.52	6.24	1200	128.40	3.63	1.44	0.06	37.0
TRS2230x12H	※◎★	12 (7.0~14.0)	0.66	7.92	1600	169.18	4.79	2.91	0.11	44.5
TRS2230x24L	※◎★	24 (15.0~27.0)	0.18	4.32	800	85.60	2.42	0.65	0.03	28.5
TRS2230x24M	※◎★	24 (15.0~27.0)	0.26	6.24	1200	128.40	3.63	1.44	0.06	37.0
TRS2230x24H	※◎★	24 (15.0~27.0)	0.40	9.60	1600	169.18	4.79	2.91	0.11	44.5
TRS2230x48L	※◎★	48 (35.0~58.0)	0.09	4.32	800	85.60	2.42	0.65	0.03	28.5
TRS2230x48M	※◎★	48 (35.0~58.0)	0.14	6.24	1200	128.40	3.63	1.44	0.06	37.0
TRS2230x48H	※◎★	48 (35.0~58.0)	0.16	7.56	1600	169.18	4.79	2.91	0.11	44.5

x Bearing System ※：Sleeve ★：WRB ◎：Ball

★如果您需要的轉速或電壓或功能不在這份清單上，請與我們業務聯繫 Please contact us, if the SPEC you need is not in the list.

★產品詳細數據及功能請參閱承認書 Please see the approval sheet for more information . ★產品規格變更不另行通知 Specifications are subject to change without notice.

DC Axial Fan

TRS22060 U SERIES Ø220X60mm

DIMENSIONS DRAWING UNIT：mm

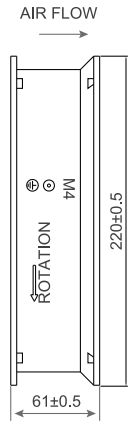

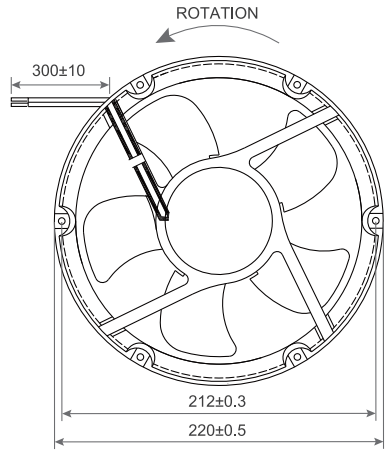

- Frame：Aluminum
  外框材質：鋁框
- Impeller：Thermoplastic PBT UL94-V0
  扇葉材質：環保防火PBT
- Bearing：※Sleeve・★WRB・◎Two Ball Bearing
  軸承：※含油・★WRB・◎滾珠軸承
- Unit Weight：2400g
  風扇單體重量：2400克

P&Q Curve At Rated Voltage

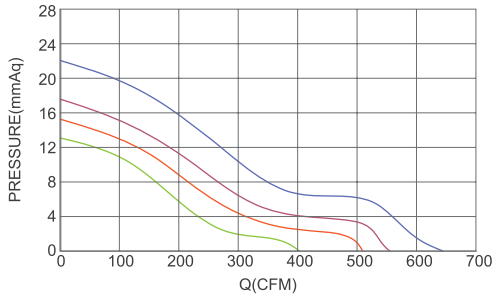

Model No.	Bearing Type	Voltage (VDC)	Current (A)	Power (W)	Speed (RPM)	Air Flow (CFM)	Air Flow (m^3/min)	Air Pressure (mmH_2O)	Air Pressure (Inch H_2O)	Noise (dBA)
TRS22060x12D	※★◎	12 (7.5~13.5)	1.65	19.80	2000	400.58	11.38	6.65	0.26	54.6
TRS22060x12L	※★◎	12 (7.5~13.5)	2.92	35.04	2500	513.39	14.59	12.15	0.48	60.0
TRS22060x12M	※★◎	12 (7.5~13.5)	4.73	56.76	3000	586.69	16.67	17.28	0.68	63.6
TRS22060x12H	※★◎	24 (7.5~13.5)	7.40	88.80	3500	645.61	18.34	22.02	0.87	68.5
TRS22060x24D	※★◎	24 (18.0~26.5)	0.78	18.82	2000	400.58	11.38	6.65	0.26	54.6
TRS22060x24L	※★◎	24 (18.0~26.5)	1.39	33.36	2500	513.39	14.59	12.15	0.48	60.0
TRS22060x24M	※★◎	24 (18.0~26.5)	2.25	54.00	3000	586.69	16.67	17.28	0.68	63.6
TRS22060x24H	※★◎	24 (18.0~26.5)	3.52	84.38	3500	645.61	18.34	22.02	0.87	68.5
TRS22060x48D	※★◎	48 (36.0~54.0)	0.37	17.86	2000	400.58	11.38	6.65	0.26	54.6
TRS22060x48L	※★◎	48 (36.0~54.0)	0.66	31.68	2500	513.39	14.59	12.15	0.48	60.0
TRS22060x48M	※★◎	48 (36.0~54.0)	1.07	51.36	3000	586.69	16.67	17.28	0.68	63.6
TRS22060x48H	※★◎	48 (36.0~54.0)	1.67	80.16	3500	645.61	18.34	22.02	0.87	68.5

x Bearing System ※：Sleeve ★：WRB ◎：Ball

★如果您需要的轉速或電壓或功能不在這份清單上，請與我們業務聯繫 Please contact us, if the SPEC you need is not in the list.

★產品詳細數據及功能請參閱承認書 Please see the approval sheet for more information . ★產品規格變更不另行通知 Specifications are subject to change without notice.

DC Axial Fan

TRL22580 SERIES 225X225X80mm

- Frame：Aluminum
  外框材質：鋁框
- Impeller：Metal
  扇葉材質：金屬葉
- Bearing ：◎Two Ball bearing
  軸承：◎滾珠軸承
- Ingress Protection：Optional IP54 or IP56
  防護等級：可選擇 IP54 or IP56

P&Q Curve | At Rated Voltage

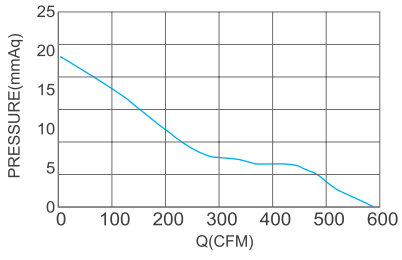

DIMENSIONS DRAWING | UNIT：mm

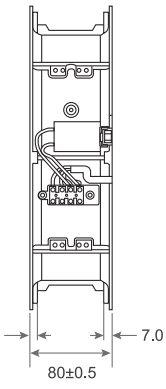

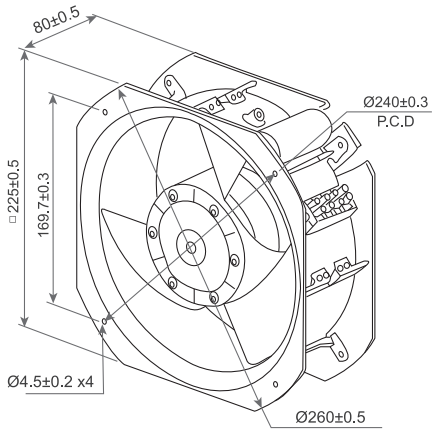

Model No.	Bearing Type	Voltage (VDC)	Current (A)	Power (W)	Speed (RPM)	Air Flow (CFM)	Air Flow (m^3/min)	Air Pressure (mmH₂O)	Air Pressure (Inch H₂O)	Noise (dBA)
TRL22580B24SD.M	◎	24	2.20	52.8	2800	580.0	16.41	18.034	0.71	67.0
TRL22580B48SD.M	◎	48	1.10	52.8	2800	580.0	16.41	18.034	0.71	67.0

DC Axial Fan

TRL22580 AF SERIES 225X225X80mm

- Frame：Sheet Aluminum
  外框材質：薄鋼板
- Impeller：Sheet Steel
  扇葉材質：薄鋼板
- Bearing ：◎Two Ball bearing
  軸承：◎滾珠軸承
- Ingress Protection：IP42
  防護等級：IP42

P&Q Curve | At Rated Voltage

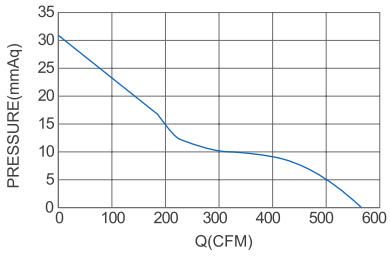

DIMENSIONS DRAWING | UNIT：mm

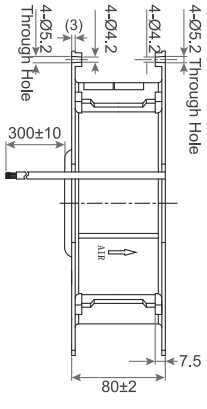

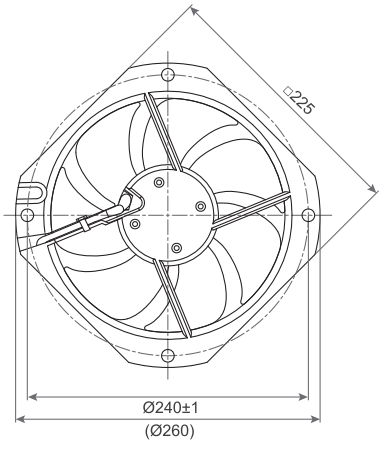

Model No.	Bearing Type	Voltage (VDC)	Current (A)	Power (W)	Speed (RPM)	Air Flow (CFM)	Air Flow (m^3/min)	Air Pressure (mmH₂O)	Air Pressure (Inch H₂O)	Noise (dBA)
TRL22580B24H	◎	24	2.30	55.0	3000	558.6	15.9	30.59	1.21	60.0
TRL22580B48H	◎	48	1.15	55.0	3000	558.6	15.9	30.59	1.21	60.0
TRL22580B3H	◎	310	0.17	55.0	3000	558.6	15.9	30.59	1.21	60.0

X Bearing System ※：Sleeve ★：WRB ◎：Ball

★如果您需要的轉速或電壓或功能不在這份清單上，請與我們業務聯繫 Please contact us, if the SPEC you need is not in the list.

★產品詳細數據及功能請參閱承認書 Please see the approval sheet for more information . ★產品規格變更不另行通知 Specifications are subject to change without notice.

DC Axial Fan

TRL25489 SERIES Ø254X89mm

- Frame：Aluminum
  外框材質：鋁框
- Impeller：Metal
  扇葉材質：金屬葉
- Bearing ：◎Two Ball bearing
  軸承：◎滾珠軸承
- Ingress Protection：Optional IP54 or IP56
  防護等級：可選擇 IP54 or IP56

P&Q Curve | At Rated Voltage

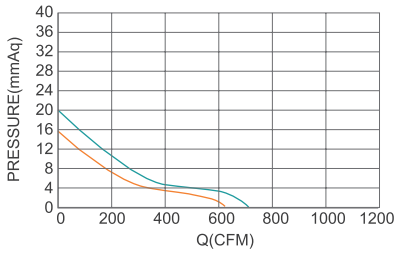

DIMENSIONS DRAWING | UNIT：mm

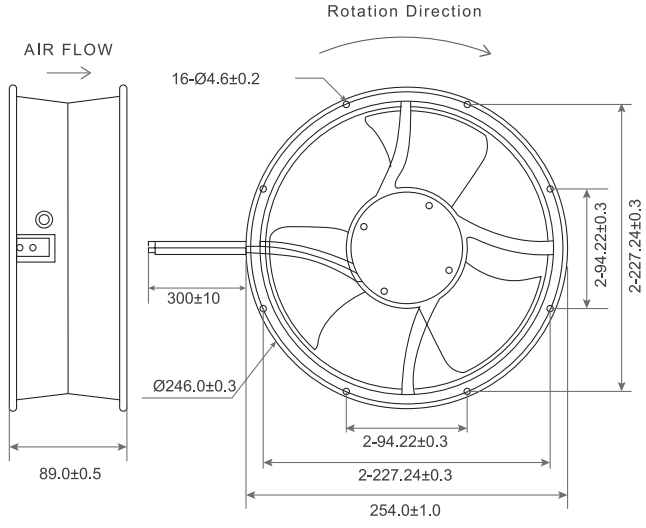

Model No.	Bearing Type	Voltage (VDC)	Current (A)	Power (W)	Speed (RPM)	Air Flow (CFM)	Air Flow (m^3/min)	Air Pressure (mmH_2O)	Air Pressure (Inch H_2O)	Noise (dBA)
TRL25489B24SD.M	◎	24	2.02	48.48	2800	784.0	22.19	14.73	0.58	60.0
TRL25489B48SD.M	◎	48	1.36	65.28	2800	784.0	22.19	14.73	0.58	60.0

DC Axial Fan

TRL28080 AF SERIES 280X280X80mm

- Frame：Sheet Aluminum
  外框材質：薄鋼板
- Impeller：Sheet Steel
  扇葉材質：薄鋼板
- Bearing：◎Two Ball bearing
  軸承：◎滾珠軸承
- Ingress Protection：IP42
  防護等級：IP42

P&Q Curve | At Rated Voltage

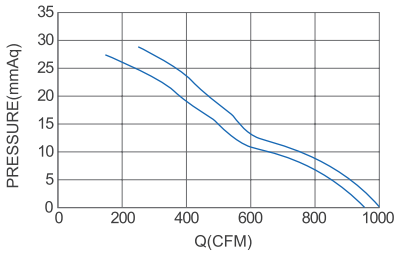

DIMENSIONS DRAWING | UNIT：mm

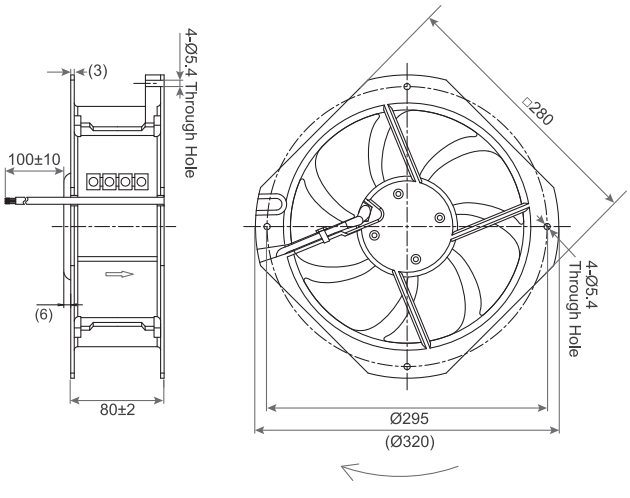

Model No.	Bearing Type	Voltage (VDC)	Current (A)	Power (W)	Speed (RPM)	Air Flow (CFM)	Air Flow (m^3/min)	Air Pressure (mmH_2O)	Air Pressure (Inch H_2O)	Noise (dBA)
TRL28080B24H.M	◎	24	4.4	105	2750	970.2	27.56	24.47	0.96	70.0
TRL28080B48H.M	◎	48	2.2	105	2750	970.2	27.56	24.47	0.96	70.0
TRL28080B3H.M	◎	310	0.44	135	3150	1000.0	28.30	24.47	0.96	69.0

X Bearing System ※：Sleeve ★：WRB ◎：Ball

★如果您需要的轉速或電壓或功能不在這份清單上，請與我們業務聯繫 Please contact us, if the SPEC you need is not in the list.

★產品詳細數據及功能請參閱承認書 Please see the approval sheet for more information . ★產品規格變更不另行通知 Specifications are subject to change without notice.

DC Axial Fan

TRL28080 SERIES 280X280X80mm

- Frame：Aluminum
  外框材質：鋁框
- Impeller：Metal
  扇葉材質：金屬葉
- Bearing ：◎Two Ball bearing
  軸承：◎滾珠軸承
- Ingress Protection：Optional IP54 or IP56
  防護等級：可選擇 IP54 or IP56

P&Q Curve At Rated Voltage

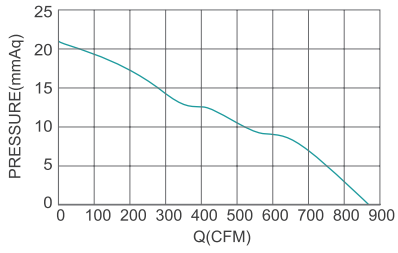

DIMENSIONS DRAWING UNIT：mm

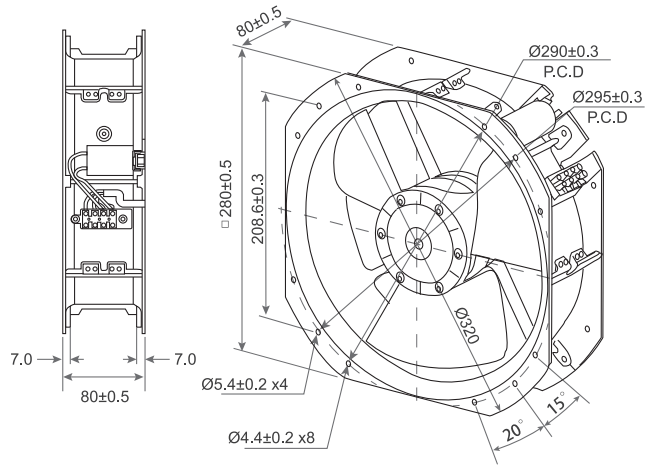

Model No.	Bearing Type	Voltage (VDC)	Current (A)	Power (W)	Speed (RPM)	Air Flow (CFM)	Air Flow (m^3/min)	Air Pressure (mmH₂O)	Air Pressure (Inch H₂O)	Noise (dBA)
TRL28080B24SD.M	◎	24	3.00	72.00	2300	860.0	24.34	21.59	0.85	65.0
TRL28080B24SD.M	◎	48	1.20	57.60	2300	860.0	24.34	21.59	0.85	65.0

Ⓧ Bearing System ※：Sleeve ★：WRB ◎：Ball

★如果您需要的轉速或電壓或功能不在這份清單上，請與我們業務聯繫 Please contact us, if the SPEC you need is not in the list.

★產品詳細數據及功能請參閱承認書 Please see the approval sheet for more information . ★產品規格變更不另行通知 Specifications are subject to change without notice.

ARSON NUOVA

DC BLOWER FAN

DC Blower Fan
SFB1504 15X15X4mm

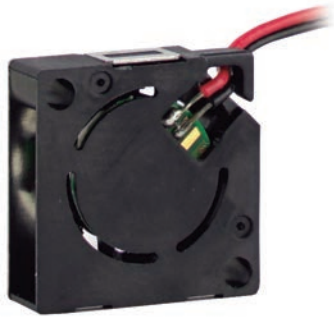

- Frame：Thermoplastic PBT UL94-V0
  外框材質：環保防火PBT
- Impeller：Thermoplastic PBT UL94-V0
  扇葉材質：環保防火PBT
- Bearing：★WRB Bearing
  軸承：★WRB軸承
- Unit Weight：1.38g
  風扇單體重量：1.38克

P&Q Curve | At Rated Voltage

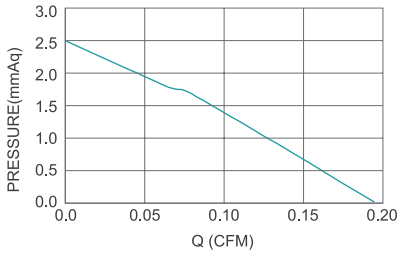

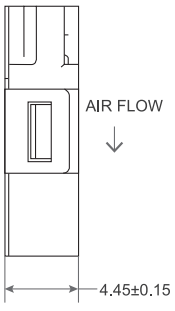

DIMENSIONS DRAWING | UNIT：mm

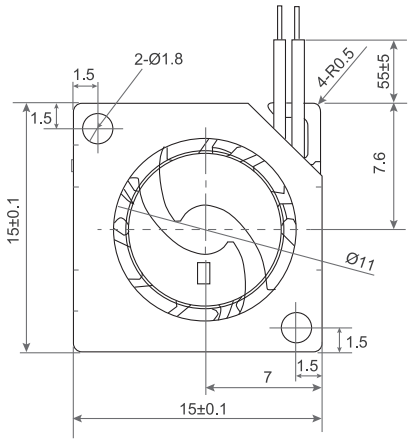

Model No.	Bearing Type	Voltage (VDC)	Current (A)	Power (W)	Speed (RPM)	Air Flow (CFM)	Air Flow (m^3/min)	Air Pressure (mmH₂O)	Air Pressure (Inch H₂O)	Noise (dBA)
SFB1504	★	3.3 (2.5~3.6)	0.035	0.12	14500	0.19	0.005	2.47	0.097	18.6

DC Blower Fan
SFB1804 18X18X4mm

- Frame：Thermoplastic PBT UL94-V0
  外框材質：環保防火PBT
- Impeller：Thermoplastic PBT UL94-V0
  扇葉材質：環保防火PBT
- Bearing：★WRB Bearing
  軸承：★WRB軸承
- Unit Weight：1.74g
  風扇單體重量：1.74克

P&Q Curve | At Rated Voltage

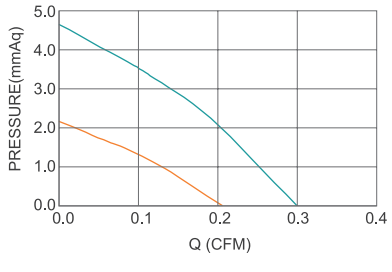

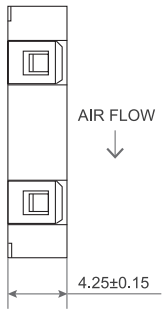

DIMENSIONS DRAWING | UNIT：mm

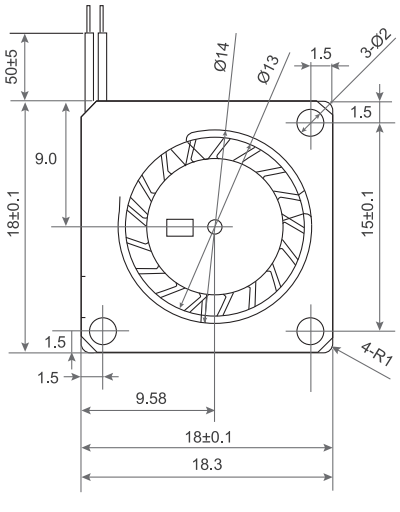

Model No.	Bearing Type	Voltage (VDC)	Current (A)	Power (W)	Speed (RPM)	Air Flow (CFM)	Air Flow (m^3/min)	Air Pressure (mmH₂O)	Air Pressure (Inch H₂O)	Noise (dBA)
SFB1804-3	★	3.3 (2.8~3.6)	0.029	0.01	8000	0.21	0.006	2.17	0.085	14.6
SFB1804-5	★	5.0 (4.5~5.5)	0.041	0.21	11000	0.30	0.008	4.66	0.184	17.3

Bearing System ※：Sleeve ★：WRB ◎：Ball

★如果您需要的轉速或電壓或功能不在這份清單上，請與我們業務聯繫 Please contact us, if the SPEC you need is not in the list.

★產品詳細數據及功能請參閱承認書 Please see the approval sheet for more information . ★產品規格變更不另行通知 Specifications are subject to change without notice.

DC Blower Fan
SFB2004 20X20X4mm

- Frame：Thermoplastic PBT UL94-V0
  外框材質：環保防火PBT
- Impeller：Thermoplastic PBT UL94-V0
  扇葉材質：環保防火PBT
- Bearing：★WRB Bearing
  軸承：★WRB軸承
- Unit Weight：2.1g
  風扇單體重量：2.1克

P&Q Curve | At Rated Voltage

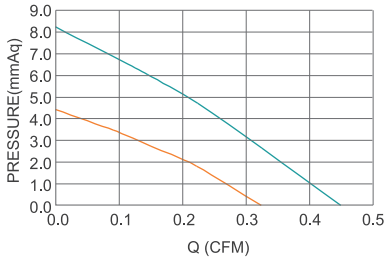

DIMENSIONS DRAWING | UNIT：mm

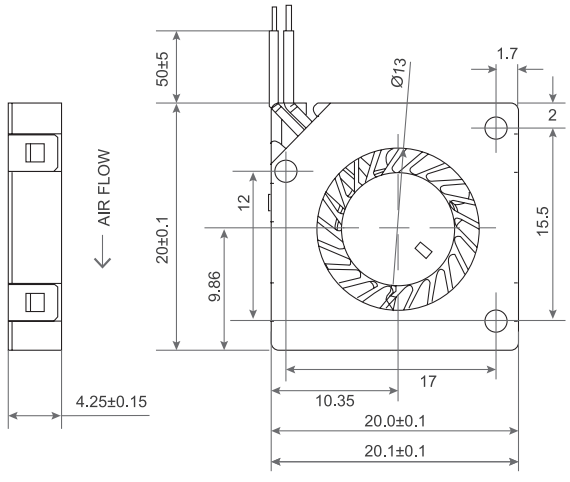

Model No.	Bearing Type	Voltage (VDC)	Current (A)	Power (W)	Speed (RPM)	Air Flow (CFM)	Air Flow (m^3/min)	Air Pressure (mmH₂O)	Air Pressure (Inch H₂O)	Noise (dBA)
SFB2004-3	★	3.3 (2.5~3.6)	0.037	0.12	10000	0.32	0.009	4.43	0.175	17.5
SFB2004-5	★	5.0 (4.5~5.5)	0.057	0.29	13000	0.45	0.013	8.23	0.324	21.5

DC Blower Fan
SFB2508 SERIES 25X20X08mm

- Frame：Thermoplastic PBT UL94-V0
  外框材質：環保防火PBT
- Impeller：Thermoplastic PBT UL94-V0
  扇葉材質：環保防火PBT
- Bearing：★WRB Bearing
  軸承：★WRB軸承
- Unit Weight：3.0g
  風扇單體重量：3.0克

P&Q Curve | At Rated Voltage

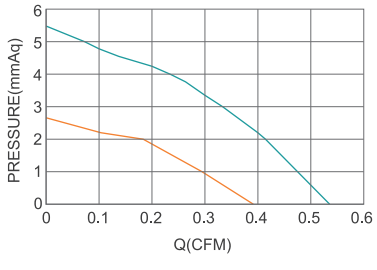

DIMENSIONS DRAWING | UNIT：mm

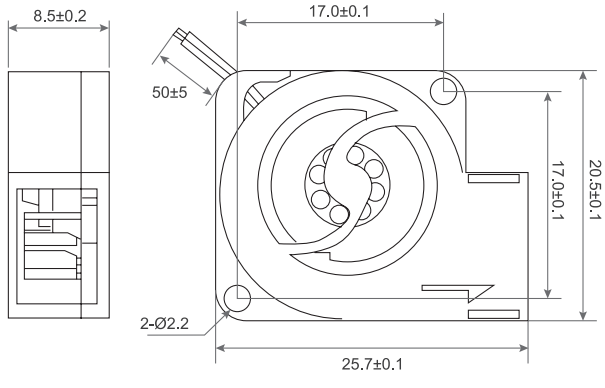

Model No.	Bearing Type	Voltage (VDC)	Current (A)	Power (W)	Speed (RPM)	Air Flow (CFM)	Air Flow (m^3/min)	Air Pressure (mmH₂O)	Air Pressure (Inch H₂O)	Noise (dBA)
SFB2008-3	★	3.3 (2.8~3.6)	0.045	0.15	6000	0.37	0.010	1.93	0.076	14.4
SFB2008-5	★	5.0 (4.5~5.5)	0.065	0.33	8000	0.48	0.014	3.29	0.130	18.2
SFB2008H-3	★	3.3 (2.8~3.6)	0.098	0.32	8000	0.48	0.014	3.29	0.130	18.2
SFB2008H-5	★	5.0 (4.5~5.5)	0.140	0.70	11000	0.65	0.018	6.27	0.247	20.8

(X) Bearing System ※：Sleeve ★：WRB ◎：Ball

★如果您需要的轉速或電壓或功能不在這份清單上，請與我們業務聯繫 Please contact us, if the SPEC you need is not in the list.

★產品詳細數據及功能請參閱承認書 Please see the approval sheet for more information . ★產品規格變更不另行通知 Specifications are subject to change without notice.

DC Blower Fan
SFB2008N 20X20X8mm

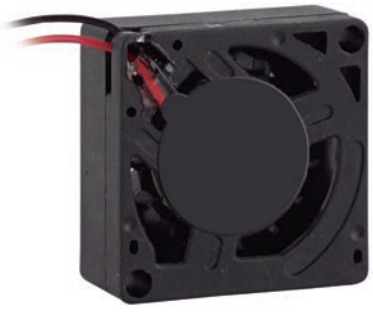

- Frame：Thermoplastic PBT UL94-V0
  外框材質：環保防火PBT
- Impeller：Thermoplastic PBT UL94-V0
  扇葉材質：環保防火PBT
- Bearing：★WRB Bearing
  軸承：★WRB軸承
- Unit Weight：2.9g
  風扇單體重量：2.9克

P&Q Curve | At Rated Voltage

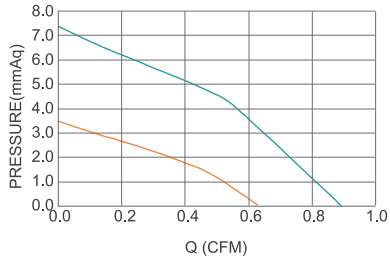

DIMENSIONS DRAWING | UNIT：mm

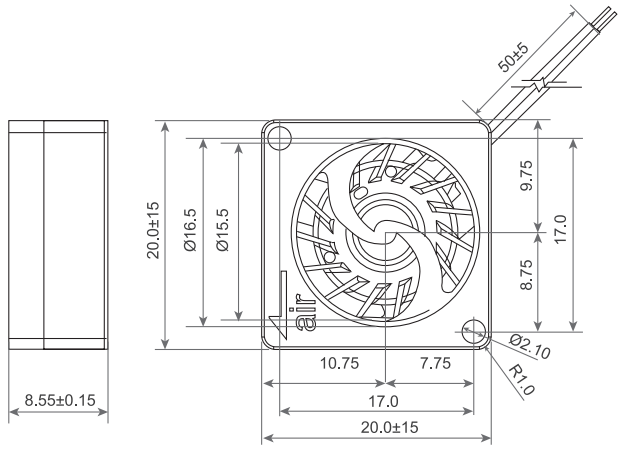

Model No.	Bearing Type	Voltage (VDC)	Current (A)	Power (W)	Speed (RPM)	Air Flow (CFM)	Air Flow (m^3/min)	Air Pressure (mmH₂O)	Air Pressure (Inch H₂O)	Noise (dBA)
SFB2008NL-3	★	3.3 (2.8~3.6)	0.045	0.15	8000	0.50	0.014	2.05	0.081	16.0
SFB2008N-3	★	3.3 (2.8~3.6)	0.085	0.28	10000	0.63	0.018	3.48	0.137	21.8
SFB2008NL-5	★	5.0 (4.5~5.5)	0.070	0.35	11000	0.70	0.020	4.24	0.167	24.0
SFB2008N-5	★	5.0 (4.5~5.5)	0.125	0.63	14000	0.89	0.025	7.36	0.290	31.1

DC Blower Fan
SFB2512 SERIES 25X25X12mm

- Frame：Thermoplastic PBT UL94-V0
  外框材質：環保防火PBT
- Impeller：Thermoplastic PBT UL94-V0
  扇葉材質：環保防火PBT
- Bearing：★WRB Bearing
  軸承：★WRB軸承
- Unit Weight：5.4g
  風扇單體重量：5.4克

P&Q Curve | At Rated Voltage

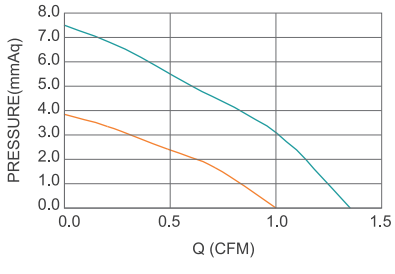

DIMENSIONS DRAWING | UNIT：mm

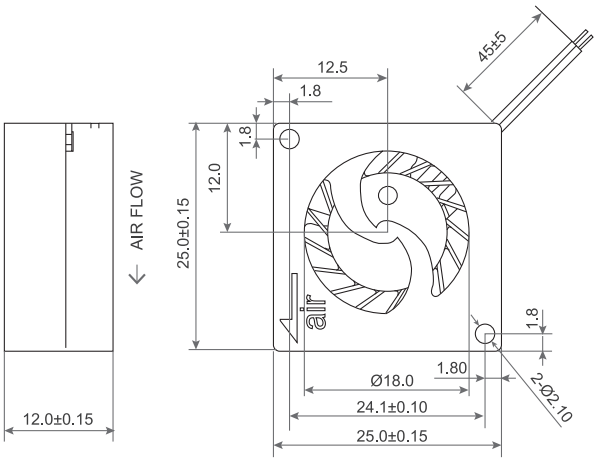

Model No.	Bearing Type	Voltage (VDC)	Current (A)	Power (W)	Speed (RPM)	Air Flow (CFM)	Air Flow (m^3/min)	Air Pressure (mmH₂O)	Air Pressure (Inch H₂O)	Noise (dBA)
SFB2512-3	★	3.3 (2.8~3.6)	0.058	0.19	7000	1.00	0.028	3.85	0.152	18.6
SFB2512-5	★	5.0 (4.5~5.5)	0.087	0.44	9500	1.35	0.038	7.49	0.295	27.0

Ⓧ Bearing System ※：Sleeve ★：WRB ◎：Ball

★如果您需要的轉速或電壓或功能不在這份清單上，請與我們業務聯繫 Please contact us, if the SPEC you need is not in the list.

★產品詳細數據及功能請參閱承認書 Please see the approval sheet for more information . ★產品規格變更不另行通知 Specifications are subject to change without notice.

DC Blower Fan

TRB2512 SERIES 25X25X12mm

- Frame：Thermoplastic PBT UL94-V0
  外框材質：環保防火PBT
- Impeller：Thermoplastic PBT UL94-V0
  扇葉材質：環保防火PBT
- Bearing：◎Two Ball bearing
  軸承：◎滾珠軸承
- Unit Weight：7.5g
  風扇單體重量：7.5克

P&Q Curve | At Rated Voltage

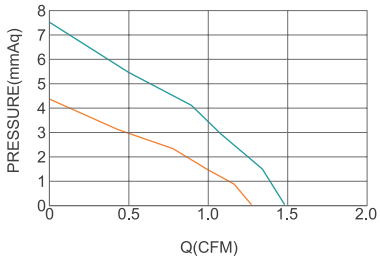

DIMENSIONS DRAWING | UNIT：mm

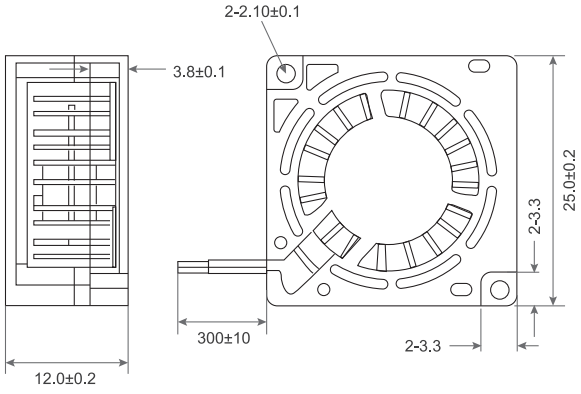

Model No.	Bearing Type	Voltage (VDC)	Current (A)	Power (W)	Speed (RPM)	Air Flow (CFM)	Air Flow (m^3/min)	Air Pressure (mmH₂O)	Air Pressure (Inch H₂O)	Noise (dBA)
TRB2512B05L	◎	5 (4.0~5.5)	0.14	0.70	9000	1.28	0.04	4.37	0.17	28.3
TRB2512B05M	◎	5 (4.0~5.5)	0.16	0.80	10500	1.49	0.04	7.55	0.30	30.7

DC Blower Fan

SFB3004 SERIES 30X30X04mm

- Frame：Thermoplastic PBT UL94-V0
  外框材質：環保防火PBT
- Impeller：Thermoplastic PBT UL94-V0
  扇葉材質：環保防火PBT
- Bearing：★WRB Bearing
  軸承：★WRB軸承
- Unit Weight：4.8g
  風扇單體重量：4.8克

P&Q Curve | At Rated Voltage

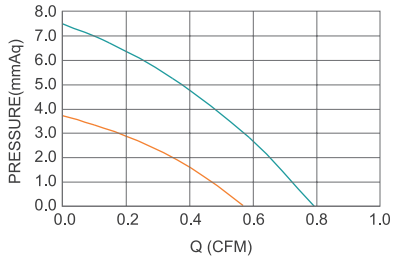

DIMENSIONS DRAWING | UNIT：mm

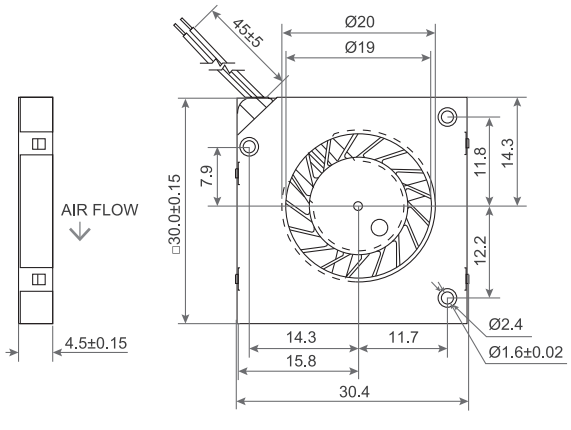

Model No.	Bearing Type	Voltage (VDC)	Current (A)	Power (W)	Speed (RPM)	Air Flow (CFM)	Air Flow (m^3/min)	Air Pressure (mmH₂O)	Air Pressure (Inch H₂O)	Noise (dBA)
SFB3004-3	★	3.3 (2.8~3.6)	0.040	0.13	6000	0.57	0.016	3.71	0.146	17.2
SFB3004-5	★	5.0 (4.5~5.5)	0.057	0.29	8500	0.79	0.022	7.48	0.295	25.7
SFB3004H	★	5.0 (2.8~5.5)	0.120	0.60	11000	1.04	0.029	14.45	0.569	32.7

X Bearing System ※：Sleeve ★：WRB ◎：Ball

★如果您需要的轉速或電壓或功能不在這份清單上，請與我們業務聯繫 Please contact us, if the SPEC you need is not in the list.

★產品詳細數據及功能請參閱承認書 Please see the approval sheet for more information . ★產品規格變更不另行通知 Specifications are subject to change without notice.

DC Blower Fan

TRB2006 U SERIES 20X20X06mm

DIMENSIONS DRAWING UNIT：mm

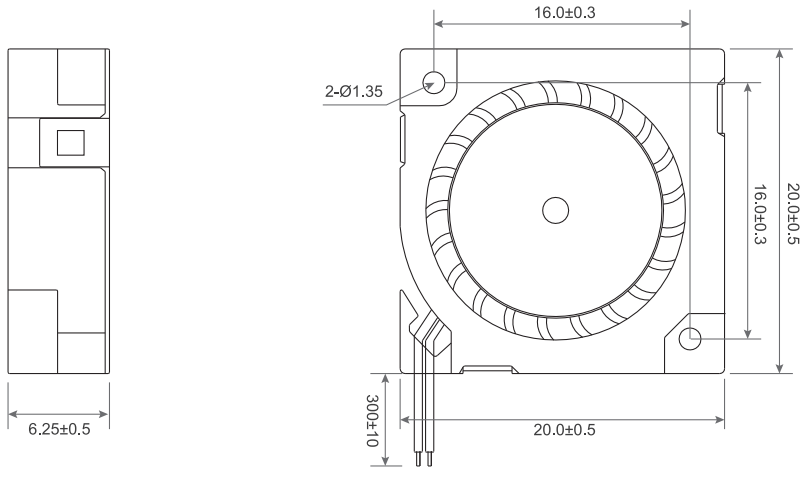

P&Q Curve At Rated Voltage

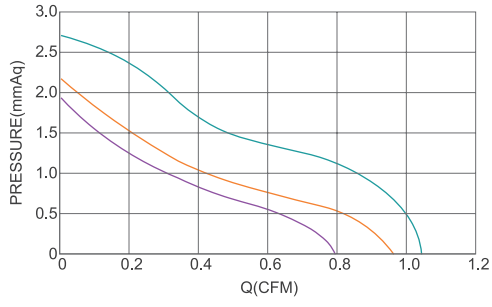

- ●Frame：Thermoplastic PBT UL94-V0
  外框材質：環保防火PBT
- ●Impeller：Thermoplastic PBT UL94-V0
  扇葉材質：環保防火PBT
- ●Bearing：※Sleeve・★WRB bearing
  軸承：※含油・★WRB軸承
- ●Unit Weight：3.8g
  風扇單體重量：3.8克

Model No.	Bearing Type	Voltage (VDC)	Current (A)	Speed (RPM)	Air Flow (CFM)	Air Flow (m^3/min)	Air Pressure (mmH_2O)	Air Pressure (Inch H_2O)	Noise (dBA)
TRB2006x03L	※★	3 (2.4~3.7)	0.10	8000	0.79	0.022	1.95	0.077	21.5
TRB2006x03M	※★	3 (2.4~3.7)	0.15	10000	0.95	0.027	2.22	0.087	25.6
TRB2006x03H	※★	3 (2.4~3.7)	0.25	12000	1.12	0.032	2.69	0.106	31.2
TRB2006x05L	※★	5 (3.5~7.0)	0.08	8000	0.79	0.022	1.95	0.077	21.5
TRB2006x05M	※★	5 (3.5~7.0)	0.12	10000	0.95	0.027	2.22	0.087	25.6
TRB2006x05H	※★	5 (3.5~7.0)	0.16	12000	1.12	0.032	2.69	0.106	31.2
TRB2006x12L	※★	12 (6.0~14.0)	0.04	8000	0.79	0.022	1.95	0.077	21.5
TRB2006x12M	※★	12 (6.0~14.0)	0.06	10000	0.95	0.027	2.22	0.087	25.6
TRB2006x12H	※★	12 (6.0~14.0)	0.10	12000	1.12	0.032	2.69	0.106	31.2

(x) Bearing System ※：Sleeve ★：WRB ◎：Ball

★如果您需要的轉速或電壓或功能不在這份清單上，請與我們業務聯繫 Please contact us, if the SPEC you need is not in the list.

★產品詳細數據及功能請參閱承認書 Please see the approval sheet for more information . ★產品規格變更不另行通知 Specifications are subject to change without notice.

DC Blower Fan

TRB3006 G SERIES 30X30X6mm

DIMENSIONS DRAWING UNIT：mm

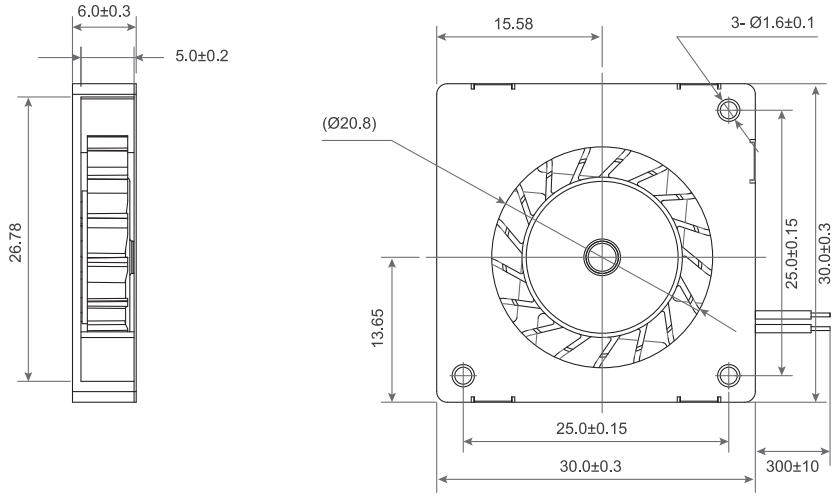

- Frame：Thermoplastic PBT UL94-V0
  外框材質：環保防火PBT
- Impeller：Thermoplastic PBT UL94-V0
  扇葉材質：環保防火PBT
- Bearing：※Sleeve・★WRB bearing
  軸承：※含油・★WRB軸承
- Unit Weight：3.6g
  風扇單體重量：3.6克

P&Q Curve At Rated Voltage

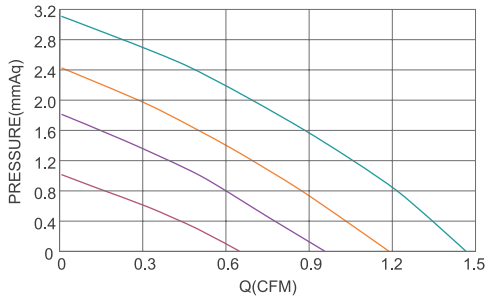

Model No.	Bearing Type	Voltage (VDC)	Current (A)	Power (W)	Speed (RPM)	Air Flow (CFM)	Air Flow (m^3/min)	Air Pressure (mmH_2O)	Air Pressure (Inch H_2O)	Noise (dBA)
TRB3006S05L	★※	5 (4.0~5.5)	0.15	0.75	4000	0.64	0.02	1.03	0.04	15.2
TRB3006S05M	★※	5 (4.0~5.5)	0.20	1.00	6000	0.95	0.03	1.83	0.07	19.0
TRB3006S05H	★※	5 (4.0~5.5)	0.30	1.50	8000	1.18	0.03	2.45	0.10	24.5
TRB3006S05VH	★※	5 (4.0~5.5)	0.40	2.00	10000	1.46	0.04	3.14	0.12	29.2

X Bearing System ※：Sleeve ★：WRB ◎：Ball

★如果您需要的轉速或電壓或功能不在這份清單上，請與我們業務聯繫 Please contact us, if the SPEC you need is not in the list.

★產品詳細數據及功能請參閱承認書 Please see the approval sheet for more information . ★產品規格變更不另行通知 Specifications are subject to change without notice.

DC Blower Fan

TRB3010 U SERIES 30X30X10mm

DIMENSIONS DRAWING UNIT：mm

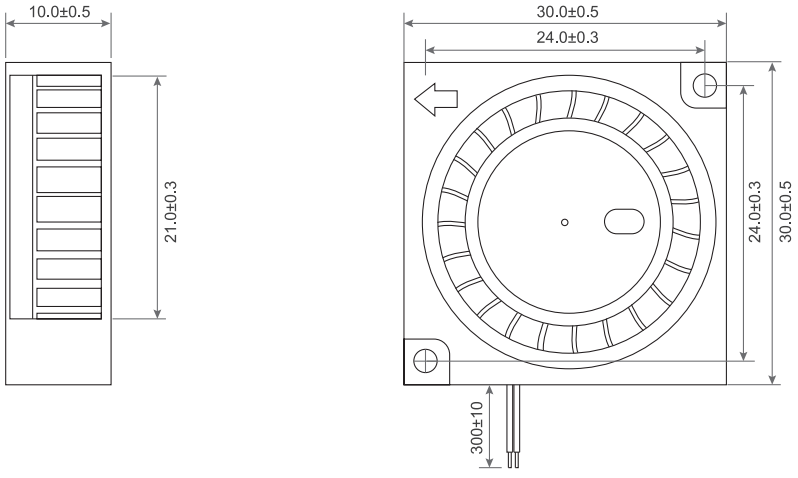

P&Q Curve At Rated Voltage

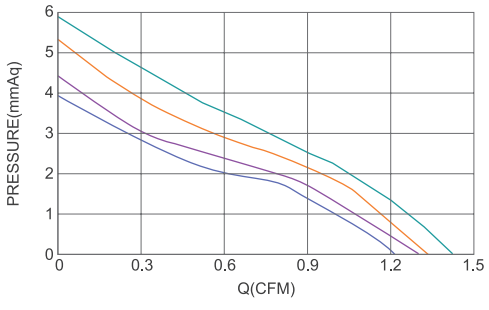

- Frame：Thermoplastic PBT UL94-V0
  外框材質：環保防火PBT
- Impeller：Thermoplastic PBT UL94-V0
  扇葉材質：環保防火PBT
- Bearing：※Sleeve・★WRB・◎Two Ball bearing
  軸承：※含油・★WRB・◎滾珠軸承
- Unit Weight：8.5g
  風扇單體重量：8.5克

Model No.	Bearing Type	Voltage (VDC)	Current (A)	Power (W)	Speed (RPM)	Air Flow (CFM)	Air Flow (m^3/min)	Air Pressure (mmH2O)	Air Pressure (Inch H2O)	Noise (dBA)
TRB3010x05D	◎※★	5 (3.5~6.8)	0.10	0.50	5500	0.90	0.025	2.27	0.089	23.4
TRB3010x05L	◎※★	5 (3.5~6.8)	0.12	0.60	6000	1.07	0.030	2.86	0.113	25.0
TRB3010x05M	◎※★	5 (3.5~6.8)	0.13	0.65	6500	1.16	0.033	3.35	0.132	26.5
TRB3010x05H	◎※★	5 (3.5~6.8)	0.14	0.70	7000	1.23	0.035	3.91	0.154	28.7
TRB3010x05VH	◎※★	5 (3.5~6.8)	0.16	0.80	7500	1.31	0.037	4.49	0.177	30.0
TRB3010x05SH	◎※★	5 (3.5~6.8)	0.18	0.90	8000	1.36	0.038	5.31	0.209	31.7
TRB3010x05XH	◎※★	5 (3.5~6.8)	0.20	1.00	8500	1.39	0.039	5.86	0.231	33.2
TRB3010x12D	◎※★	12 (6.0~13.5)	0.04	0.50	5500	0.90	0.025	2.27	0.089	23.4
TRB3010x12L	◎※★	12 (6.0~13.5)	0.05	0.60	6000	1.07	0.030	2.86	0.113	25.0
TRB3010x12M	◎※★	12 (6.0~13.5)	0.05	0.65	6500	1.16	0.033	3.35	0.132	26.5
TRB3010x12H	◎※★	12 (6.0~13.5)	0.06	0.70	7000	1.23	0.035	3.91	0.154	28.7
TRB3010x12VH	◎※★	12 (6.0~13.5)	0.07	0.80	7500	1.31	0.037	4.49	0.177	30.0
TRB3010x12SH	◎※★	12 (6.0~13.5)	0.08	0.90	8000	1.36	0.038	5.31	0.209	31.7
TRB3010x12XH	◎※★	12 (6.0~13.5)	0.08	1.00	8500	1.39	0.039	5.86	0.231	33.2
TRB3010x24L	◎※★	24 (18.0~26.5)	0.03	0.72	6000	1.07	0.030	2.86	0.113	25.0
TRB3010x24H	◎※★	24 (18.0~26.5)	0.04	0.96	7000	1.23	0.035	3.91	0.154	28.7
TRB3010x24SH	◎※★	24 (18.0~26.5)	0.05	1.20	8000	1.36	0.038	5.31	0.209	31.7

x Bearing System ※：Sleeve ★：WRB ◎：Ball

★如果您需要的轉速或電壓或功能不在這份清單上，請與我們業務聯繫 Please contact us, if the SPEC you need is not in the list.

★產品詳細數據及功能請參閱承認書 Please see the approval sheet for more information . ★產品規格變更不另行通知 Specifications are subject to change without notice.

DC Blower Fan

TRB3015 U SERIES 30X30X15mm

DIMENSIONS DRAWING UNIT：mm

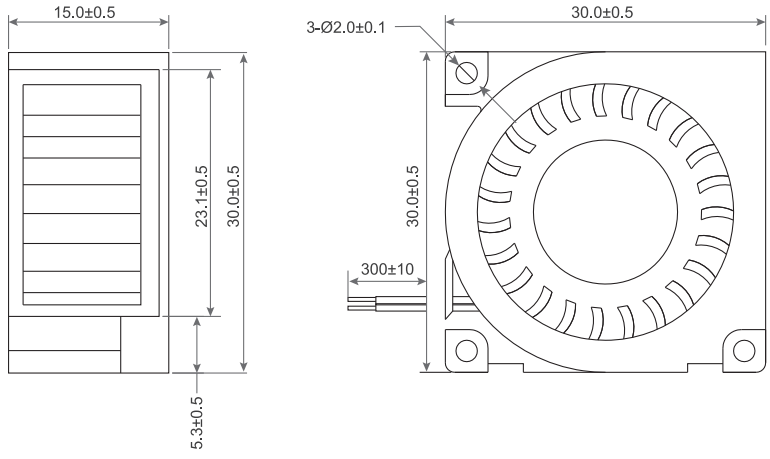

P&Q Curve At Rated Voltage

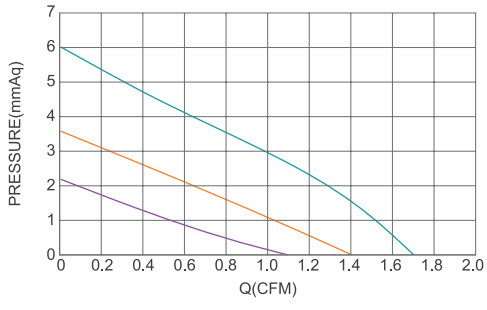

- Frame：Thermoplastic PBT UL94-V0
  外框材質：環保防火PBT
- Impeller：Thermoplastic PBT UL94-V0
  扇葉材質：環保防火PBT
- Bearing：※Sleeve・★WRB・◎Two Ball bearing
  軸承：※含油・★WRB・◎滾珠軸承
- Unit Weight：10g
  風扇單體重量：10克

Model No.	Bearing Type	Voltage (VDC)	Current (A)	Power (W)	Speed (RPM)	Air Flow (CFM)	Air Flow (m^3/min)	Air Pressure (mmH_2O)	Air Pressure (Inch H_2O)	Noise (dBA)
TRB3015x05L	◎※★	5 (3.6~6.8)	0.10	0.5	4000	1.1	0.03	2.18	0.086	17.9
TRB3015x05M	◎※★	5 (3.6~6.8)	0.12	0.6	5000	1.4	0.04	3.66	0.144	21.1
TRB3015x05H	◎※★	5 (3.6~6.8)	0.13	0.7	6000	1.7	0.05	6.04	0.238	25.3
TRB3015x12L	◎※★	12 (7.0~13.8)	0.04	0.5	4000	1.1	0.03	2.18	0.086	17.9
TRB3015x12M	◎※★	12 (7.0~13.8)	0.05	0.6	5000	1.4	0.04	3.66	0.144	21.1
TRB3015x12H	◎※★	12 (7.0~13.8)	0.05	0.7	6000	1.7	0.05	6.04	0.238	25.3

X Bearing System ※：Sleeve ★：WRB ◎：Ball

★如果您需要的轉速或電壓或功能不在這份清單上，請與我們業務聯繫 Please contact us, if the SPEC you need is not in the list.

★產品詳細數據及功能請參閱承認書 Please see the approval sheet for more information . ★產品規格變更不另行通知 Specifications are subject to change without notice.

DC Blower Fan

TRB3507 U SERIES 35X35X7mm

DIMENSIONS DRAWING UNIT：mm

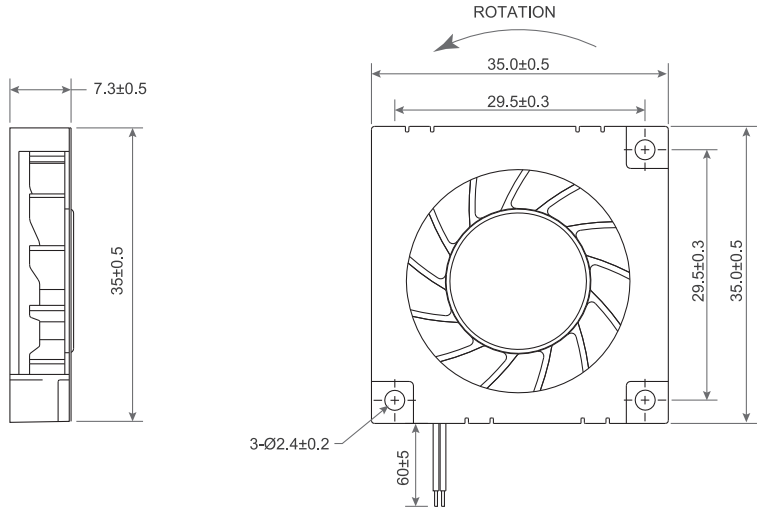

- Frame：Thermoplastic PBT UL94-V0
  外框材質：環保防火PBT
- Impeller：Thermoplastic PBT UL94-V0
  扇葉材質：環保防火PBT
- Bearing：※Sleeve・★WRB・◎Two Ball bearing
  軸承：※含油・★WRB・◎滾珠軸承
- Unit Weight：8.5g
  風扇單體重量：8.5克

P&Q Curve At Rated Voltage

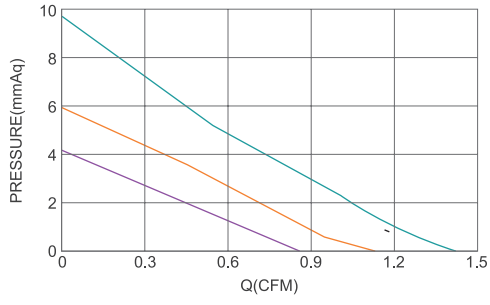

Model No.	Bearing Type	Voltage (VDC)	Current (A)	Power (W)	Speed (RPM)	Air Flow (CFM)	Air Flow (m^3/min)	Air Pressure (mmH2O)	Air Pressure (Inch H2O)	Noise (dBA)
TRB3507x05L	◎※★	5 (3.0~6.0)	0.08	0.4	5000	0.84	0.024	4.08	0.161	23.9
TRB3507x05M	◎※★	5 (3.0~6.0)	0.12	0.6	6000	1.11	0.031	5.92	0.233	27.2
TRB3507x05H	◎※★	5 (3.0~6.0)	0.18	0.9	7500	1.39	0.039	9.84	0.387	32.3
TRB3507x12L	◎※★	12 (7.5~13.5)	0.03	0.4	5000	0.84	0.024	4.08	0.161	23.9
TRB3507x12M	◎※★	12 (7.5~13.5)	0.05	0.6	6000	1.11	0.031	5.92	0.233	27.2
TRB3507x12H	◎※★	12 (7.5~13.5)	0.08	0.9	7500	1.39	0.039	9.84	0.387	32.3

(x) Bearing System ※：Sleeve ★：WRB ◎：Ball

★如果您需要的轉速或電壓或功能不在這份清單上，請與我們業務聯繫 Please contact us, if the SPEC you need is not in the list.

★產品詳細數據及功能請參閱承認書 Please see the approval sheet for more information . ★產品規格變更不另行通知 Specifications are subject to change without notice.

DC Blower Fan

TRB3510 U SERIES 35X35X10mm

DIMENSIONS DRAWING UNIT：mm

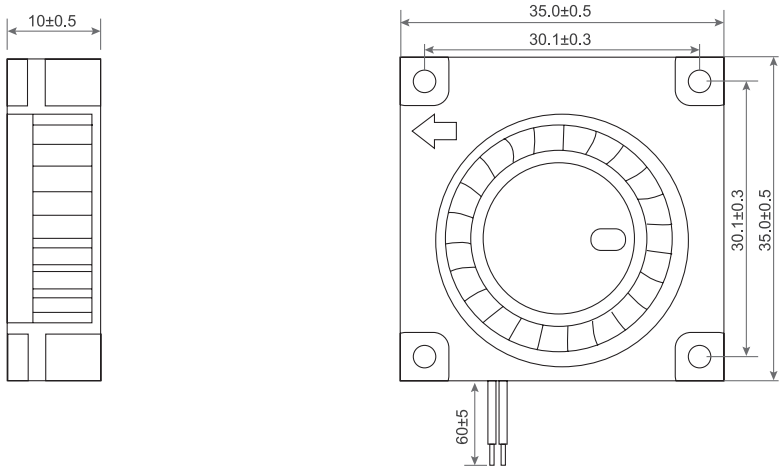

- Frame：Thermoplastic PBT UL94-V0
  外框材質：環保防火PBT
- Impeller：Thermoplastic PBT UL94-V0
  扇葉材質：環保防火PBT
- Bearing：※Sleeve・★WRB・◎Two Ball bearing
  軸承：※含油・★WRB・◎滾珠軸承
- Unit Weight：8.5g
  風扇單體重量：8.5克

P&Q Curve At Rated Voltage

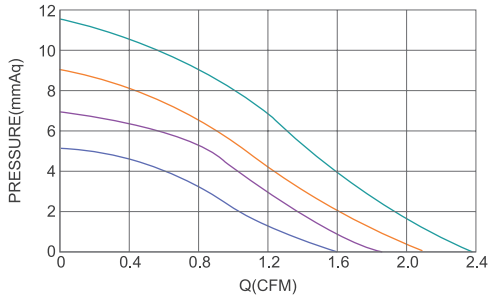

Model No.	Bearing Type	Voltage (VDC)	Current (A)	Power (W)	Speed (RPM)	Air Flow (CFM)	Air Flow (m^3/min)	Air Pressure (mmH₂O)	Air Pressure (Inch H₂O)	Noise (dBA)
TRB3510x05D	◎※★	5 (3.6~6.8)	0.12	0.6	6000	1.42	0.040	3.62	0.143	27.5
TRB3510x05L	◎※★	5 (3.6~6.8)	0.14	0.7	7000	1.60	0.045	5.20	0.205	31.6
TRB3510x05M	◎※★	5 (3.6~6.8)	0.18	0.9	8000	1.86	0.053	6.92	0.272	34.9
TRB3510x05H	◎※★	5 (3.6~6.8)	0.22	1.1	9000	2.14	0.061	9.10	0.358	37.4
TRB3510x05VH	◎※★	5 (3.6~6.8)	0.28	1.4	10000	2.38	0.067	11.58	0.456	40.0
TRB3510x12D	◎※★	12 (6.0~18.0)	0.05	0.6	6000	1.42	0.040	3.62	0.143	27.5
TRB3510x12L	◎※★	12 (7.0~18.0)	0.06	0.7	7000	1.60	0.045	5.20	0.205	31.6
TRB3510x12M	◎※★	12 (7.0~13.5)	0.08	0.9	8000	1.86	0.053	6.92	0.272	34.9
TRB3510x12H	◎※★	12 (7.0~13.5)	0.09	1.1	9000	2.14	0.061	9.10	0.358	37.4
TRB3510x12VH	◎※★	12 (7.0~13.5)	0.12	1.4	10000	2.38	0.067	11.58	0.456	40.0

X Bearing System ※：Sleeve ★：WRB ◎：Ball

★如果您需要的轉速或電壓或功能不在這份清單上，請與我們業務聯繫 Please contact us, if the SPEC you need is not in the list.

★產品詳細數據及功能請參閱承認書 Please see the approval sheet for more information . ★產品規格變更不另行通知 Specifications are subject to change without notice.

DC Blower Fan

TRB3517 SERIES 35X35X17mm

DIMENSIONS DRAWING UNIT：mm

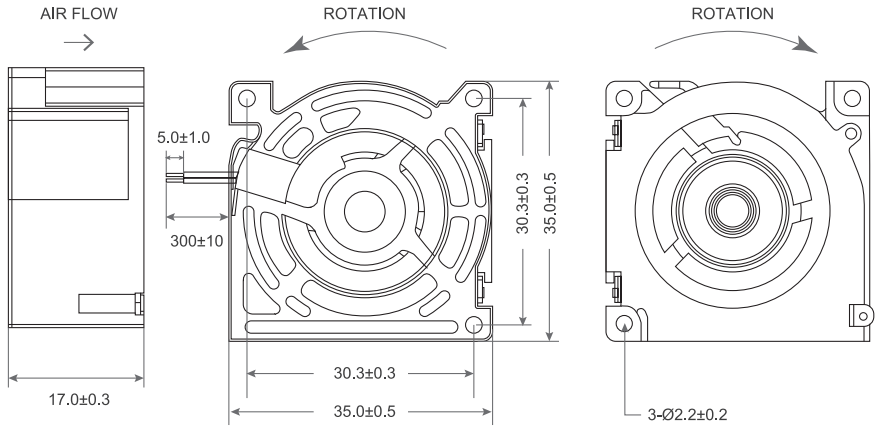

- Frame：Thermoplastic PBT UL94-V0
  外框材質：環保防火PBT
- Impeller：Thermoplastic PBT UL94-V0
  扇葉材質：環保防火PBT
- Bearing：★WRB・◎Two Ball bearing
  軸承：★WRB・◎滾珠軸承
- Unit Weight：24g
  風扇單體重量：24克

P&Q Curve At Rated Voltage

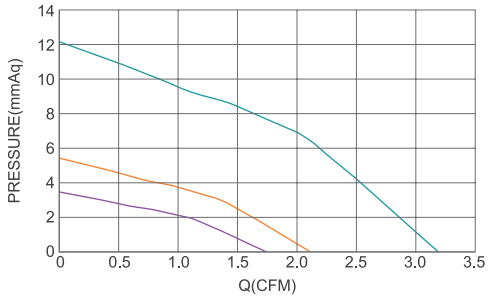

Model No.	Bearing Type	Voltage (VDC)	Current (A)	Power (W)	Speed (RPM)	Air Flow (CFM)	Air Flow (m^3/min)	Air Pressure (mmH2O)	Air Pressure (Inch H2O)	Noise (dBA)
TRB3517x05D	★◎	5 (4.0~5.5)	0.15	0.75	6000	1.73	0.05	3.53	0.14	33.5
TRB3517x05L	★◎	5 (4.0~5.5)	0.24	1.20	6800	2.16	0.06	5.52	0.22	36.5
TRB3517x05M	★◎	5 (4.0~5.5)	0.29	1.45	7400	3.19	0.09	12.10	0.48	37.9

x Bearing System ※：Sleeve ★：WRB ◎：Ball

★如果您需要的轉速或電壓或功能不在這份清單上，請與我們業務聯繫 Please contact us, if the SPEC you need is not in the list.

★產品詳細數據及功能請參閱承認書 Please see the approval sheet for more information . ★產品規格變更不另行通知 Specifications are subject to change without notice.

DC Blower Fan

TRB4010 SERIES 40X40X10mm

DIMENSIONS DRAWING UNIT：mm

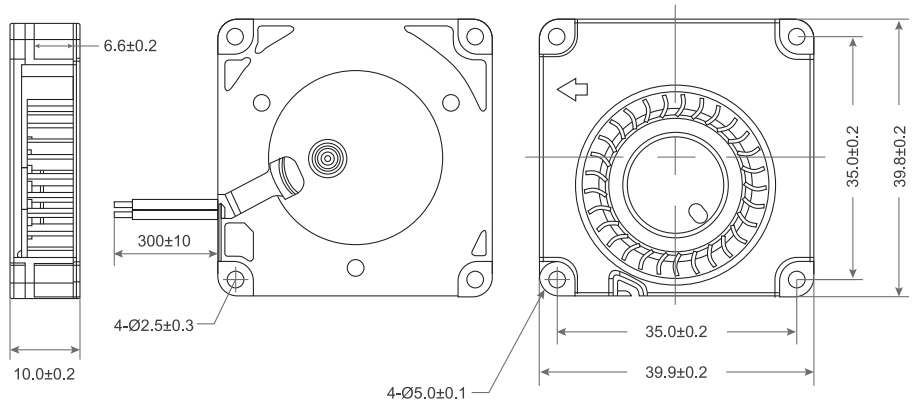

- Frame：Thermoplastic PBT UL94-V0
  外框材質：環保防火PBT
- Impeller：Thermoplastic PBT UL94-V0
  扇葉材質：環保防火PBT
- Bearing：★WRB・◎Two Ball bearing
  軸承：★WRB・◎滾珠軸承
- Unit Weight：26g
  風扇單體重量：26克

P&Q Curve At Rated Voltage

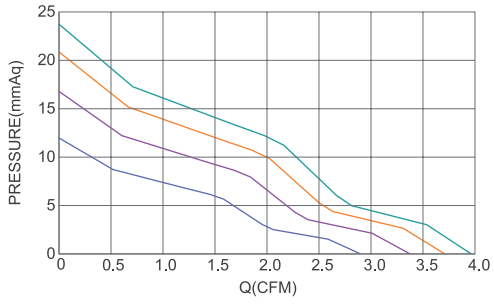

Model No.	Bearing Type	Voltage (VDC)	Current (A)	Power (W)	Speed (RPM)	Air Flow (CFM)	Air Flow (m^3/min)	Air Pressure (mmH2O)	Air Pressure (Inch H2O)	Noise (dBA)
TRB4010x05L	★◎	5 (4.0~5.5)	0.12	0.60	5700	2.56	0.07	9.88	0.39	35.2
TRB4010x05M	★◎	5 (4.0~5.5)	0.17	0.85	6500	2.92	0.08	12.84	0.51	38.7
TRB4010x05H	★◎	5 (4.0~5.5)	0.20	1.00	7500	3.37	0.10	17.10	0.67	40.3
TRB4010x12M	★◎	12 (7.0~14.0)	0.09	1.08	6500	2.92	0.08	12.84	0.51	38.7
TRB4010x12H	★◎	12 (7.0~14.0)	0.10	1.20	7500	3.37	0.1	17.10	0.67	40.3
TRB4010x12VH	★◎	12 (7.0~14.0)	0.12	1.44	8300	3.73	0.11	20.94	0.82	43.5
TRB4010x12SH	★◎	12 (7.0~14.0)	0.15	1.80	8800	3.96	0.11	23.54	0.93	45.2
TRB4010x24H	★◎	24 (15.0~27.0)	0.08	1.92	8300	3.73	0.11	20.94	0.82	43.5
TRB4010x24SH	★◎	24 (15.0~27.0)	0.08	1.92	8800	3.96	0.11	23.54	0.93	45.2

X Bearing System ※：Sleeve ★：WRB ◎：Ball

★如果您需要的轉速或電壓或功能不在這份清單上，請與我們業務聯繫 Please contact us, if the SPEC you need is not in the list.

★產品詳細數據及功能請參閱承認書 Please see the approval sheet for more information . ★產品規格變更不另行通知 Specifications are subject to change without notice.

DC Blower Fan

TRB4015 U SERIES 40X40X15mm

DIMENSIONS DRAWING UNIT：mm

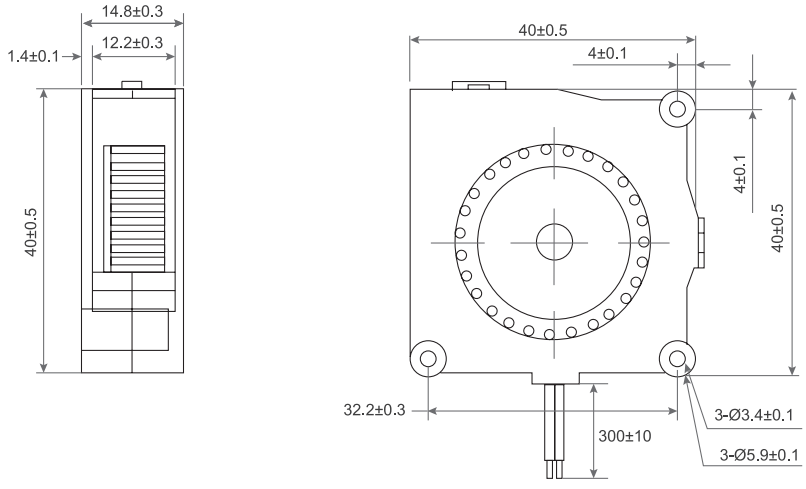

- Frame：Thermoplastic PBT UL94-V0
  外框材質：環保防火PBT
- Impeller：Thermoplastic PBT UL94-V0
  扇葉材質：環保防火PBT
- Bearing：※Sleeve・◎Two Ball bearing
  軸承：※含油・◎滾珠軸承
- Unit Weight：21g
  風扇單體重量：21克

P&Q Curve At Rated Voltage

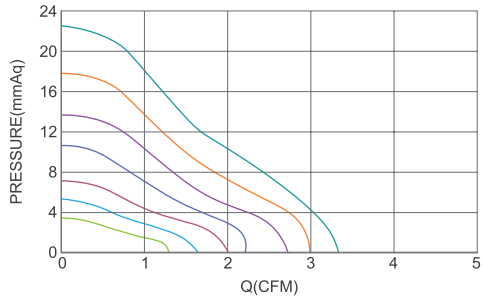

Model No.	Bearing Type	Voltage (VDC)	Current (A)	Power (W)	Speed (RPM)	Air Flow (CFM)	Air Flow (m^3/min)	Air Pressure (mmH_2O)	Air Pressure (Inch H_2O)	Noise (dBA)
TRB4015x05D	※◎	5 (3.6~6.8)	0.072	0.36	5000	1.37	0.039	3.42	0.135	29.0
TRB4015x05L	※◎	5 (3.6~6.8)	0.096	0.48	6000	1.64	0.046	5.25	0.207	33.5
TRB4015x05M	※◎	5 (3.6~6.8)	0.120	0.60	7000	1.97	0.056	7.15	0.281	37.6
TRB4015x05H	※◎	5 (3.6~6.8)	0.168	0.84	8000	2.39	0.068	10.58	0.417	41.2
TRB4015x05VH	※◎	5 (3.6~6.8)	0.216	1.08	9000	2.70	0.076	13.70	0.539	44.7
TRB4015x05SH	※◎	5 (3.6~6.8)	0.312	1.56	10000	2.95	0.083	17.70	0.697	47.0
TRB4015x05XH	※◎	5 (3.6~6.8)	0.350	1.80	11000	3.33	0.094	22.57	0.888	49.4
TRB4015x12D	※◎	12 (6.5~13.5)	0.030	0.36	5000	1.37	0.039	3.42	0.135	29.0
TRB4015x12L	※◎	12 (6.5~13.5)	0.040	0.48	6000	1.64	0.046	5.25	0.207	33.5
TRB4015x12M	※◎	12 (6.5~13.5)	0.050	0.60	7000	1.97	0.056	7.15	0.281	37.6
TRB4015x12H	※◎	12 (6.5~13.5)	0.070	0.84	8000	2.39	0.068	10.58	0.417	41.2
TRB4015x12VH	※◎	12 (6.5~13.5)	0.090	1.08	9000	2.70	0.076	13.70	0.539	44.7
TRB4015x12SH	※◎	12 (6.5~13.5)	0.130	1.56	10000	2.95	0.083	17.70	0.697	47.0
TRB4015x12XH	※◎	12 (6.5~13.5)	0.150	1.80	11000	3.33	0.094	22.57	0.888	49.4

X Bearing System ※：Sleeve ★：WRB ◎：Ball

★如果您需要的轉速或電壓或功能不在這份清單上，請與我們業務聯繫 Please contact us, if the SPEC you need is not in the list.

★產品詳細數據及功能請參閱承認書 Please see the approval sheet for more information . ★產品規格變更不另行通知 Specifications are subject to change without notice.

DC Blower Fan

TRB4020 SERIES 40X40X20mm

DIMENSIONS DRAWING UNIT：mm

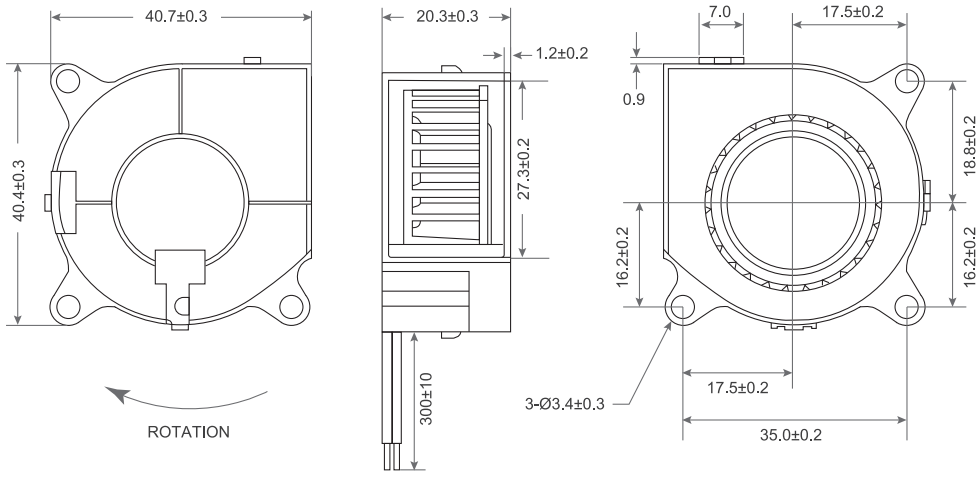

- Frame：Thermoplastic PBT UL94-V0
  外框材質：環保防火PBT
- Impeller：Thermoplastic PBT UL94-V0
  扇葉材質：環保防火PBT
- Bearing：・★WRB・◎Two Ball bearing
  軸承：★WRB・◎滾珠軸承
- Unit Weight：26g
  風扇單體重量：26克

P&Q Curve At Rated Voltage

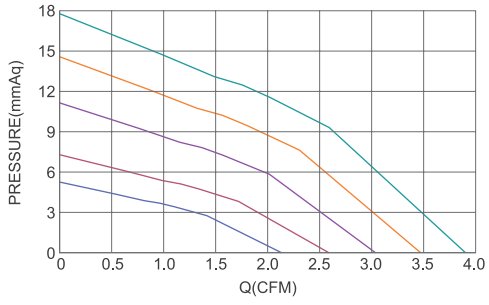

Model No.	Bearing Type	Voltage (VDC)	Current (A)	Power (W)	Speed (RPM)	Air Flow (CFM)	Air Flow (m^3/min)	Air Pressure (mmH2O)	Air Pressure (Inch H2O)	Noise (dBA)
TRB4020x05D	★◎	5 (4.0~6.0)	0.10	0.50	4000	1.73	0.05	3.53	0.14	28.6
TRB4020x05L	★◎	5 (4.0~6.0)	0.15	0.75	5000	2.16	0.06	5.52	0.22	30.5
TRB4020x05M	★◎	5 (4.0~6.0)	0.20	1.00	6000	2.59	0.07	7.95	0.31	35.1
TRB4020x05H	★◎	5 (4.0~6.0)	0.28	1.40	7000	3.02	0.09	10.82	0.43	38.6
TRB4020x12D	★◎	12 (7.0~14.0)	0.04	0.48	4000	1.73	0.05	3.53	0.14	28.6
TRB4020x12L	★◎	12 (7.0~14.0)	0.06	0.72	5000	2.16	0.06	5.52	0.22	30.5
TRB4020x12M	★◎	12 (7.0~14.0)	0.08	0.96	6000	2.59	0.07	7.95	0.31	35.1
TRB4020x12H	★◎	12 (7.0~14.0)	0.12	1.44	7000	3.02	0.09	10.82	0.43	38.6
TRB4020x12VH	★◎	12 (7.0~14.0)	0.17	2.04	8000	3.45	0.10	14.14	0.56	42.1
TRB4020x12SH	★◎	12 (7.0~14.0)	0.24	2.88	9000	3.88	0.11	17.89	0.70	45.7
TRB4020x24L	★◎	24 (15.0~27.0)	0.05	1.20	5000	2.16	0.06	5.52	0.22	30.5
TRB4020x24M	★◎	24 (15.0~27.0)	0.06	1.44	6000	2.59	0.07	7.95	0.31	35.1
TRB4020x24H	★◎	24 (15.0~27.0)	0.09	2.16	7000	3.02	0.09	10.82	0.43	38.6
TRB4020x24VH	★◎	24 (15.0~27.0)	0.12	2.88	8000	3.45	0.10	14.14	0.56	42.1
TRB4020x24SH	★◎	24 (15.0~27.0)	0.14	3.36	9000	3.88	0.11	17.89	0.70	45.7

X Bearing System ※：Sleeve ★：WRB ◎：Ball

★如果您需要的轉速或電壓或功能不在這份清單上，請與我們業務聯繫 Please contact us, if the SPEC you need is not in the list.

★產品詳細數據及功能請參閱承認書 Please see the approval sheet for more information . ★產品規格變更不另行通知 Specifications are subject to change without notice.

DC Blower Fan

SFB4505 SERIES 45X46X05mm

- Frame：Thermoplastic PBT UL94-V0
  外框材質：環保防火PBT
- Impeller：Thermoplastic PBT UL94-V0
  扇葉材質：環保防火PBT
- Bearing：★WRB Bearing
  軸承：★WRB軸承
- Unit Weight：7.2g
  風扇單體重量：7.2克

P&Q Curve | At Rated Voltage

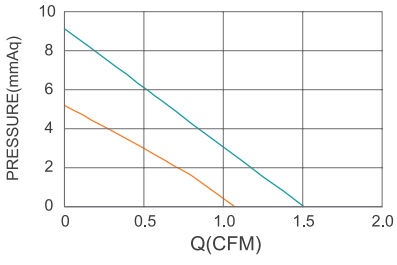

DIMENSIONS DRAWING | UNIT：mm

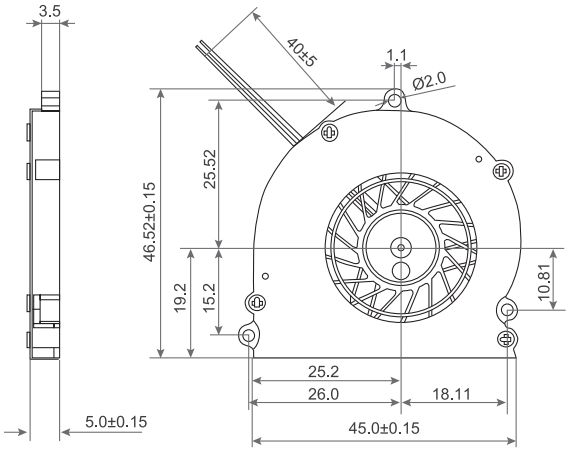

Model No.	Bearing Type	Voltage (VDC)	Current (mA)	Power (W)	Speed (RPM)	Air Flow (CFM)	Air Flow (m^3/min)	Air Pressure (mmH2O)	Air Pressure (Inch H2O)	Noise (dBA)
SFB4505-3	★	3.3 (2.8~3.6)	115	0.38	4500	1.15	0.033	5.19	0.204	21.3
SFB4505-5	★	5.0 (4.5~5.5)	165	0.83	6000	1.51	0.043	9.08	0.358	28.1

DC Blower Fan

TRB4510 U SERIES 45X45X10mm

- Frame：Thermoplastic PBT UL94-V0
  外框材質：環保防火PBT
- Impeller：Thermoplastic PBT UL94-V0
  扇葉材質：環保防火PBT
- Bearing：※Sleeve ・★WRB ・◎Two Ball
  軸承：※含油・★WRB・◎滾珠軸承
- Unit Weight：26g
  風扇單體重量：26克

P&Q Curve | At Rated Voltage

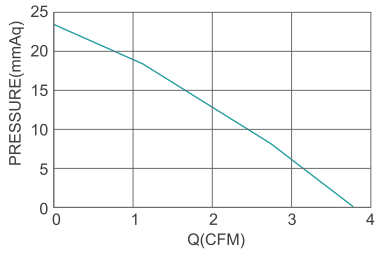

DIMENSIONS DRAWING | UNIT：mm

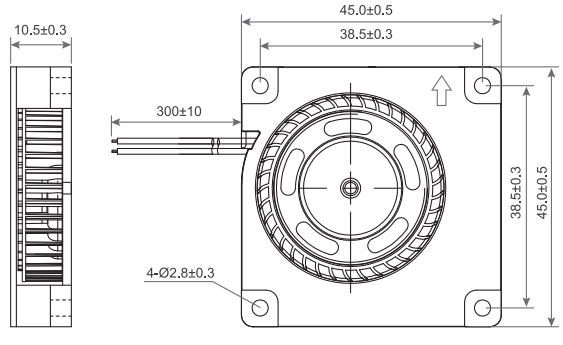

Model No.	Bearing Type	Voltage (VDC)	Current (A)	Power (W)	Speed (RPM)	Air Flow (CFM)	Air Flow (m^3/min)	Air Pressure (mmH2O)	Air Pressure (Inch H2O)	Noise (dBA)
TRB4510x05H	※★◎	5 (3.0~6.0)	0.50	2.5	8500	3.7	0.11	23.3	0.92	41.8
TRB4510x12H	※★◎	12 (6.0~13.5)	0.21	2.5	8500	3.7	0.11	23.3	0.92	41.8

(x) Bearing System ※：Sleeve ★：WRB ◎：Ball

★如果您需要的轉速或電壓或功能不在這份清單上，請與我們業務聯繫 Please contact us, if the SPEC you need is not in the list.

★產品詳細數據及功能請參閱承認書 Please see the approval sheet for more information . ★產品規格變更不另行通知 Specifications are subject to change without notice.

DC Blower Fan

TRB5010 G SERIES 50X50X10mm

DIMENSIONS DRAWING UNIT：mm

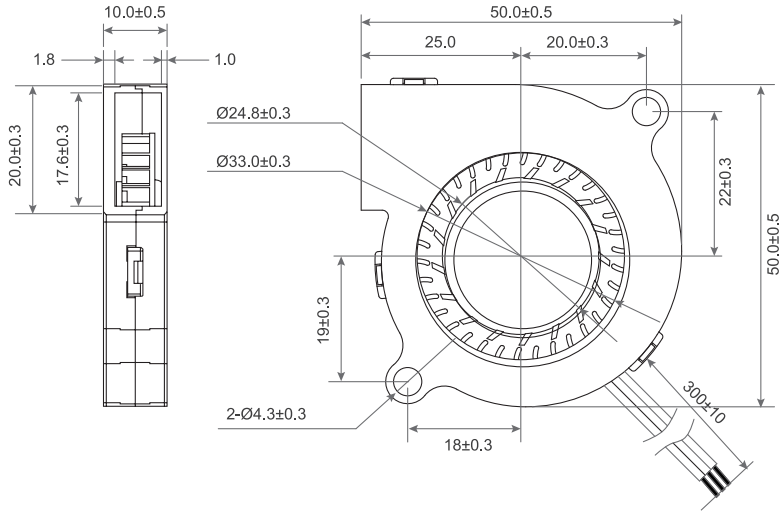

- Frame：Thermoplastic PBT UL94-V0
  外框材質：環保防火PBT
- Impeller：Thermoplastic PBT UL94-V0
  扇葉材質：環保防火PBT
- Bearing：※Sleeve・★WRB・◎Two Ball bearing
  軸承：※含油・★WRB・◎滾珠軸承
- Unit Weight：18.6g
  風扇單體重量：18.6克

P&Q Curve At Rated Voltage

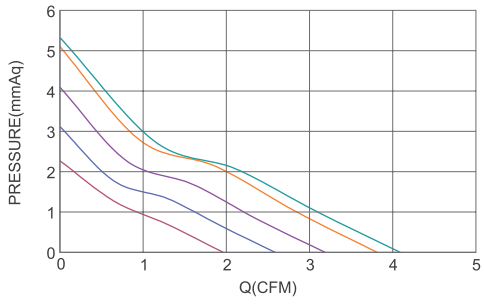

Model No.	Bearing Type	Voltage (VDC)	Current (A)	Power (W)	Speed (RPM)	Air Flow (CFM)	Air Flow (m^3/min)	Air Pressure (mmH_2O)	Air Pressure (Inch H_2O)	Noise (dBA)
TRB5010x05L	※★◎	5 (3.5~5.0)	0.20	1.00	3500	1.83	0.05	2.26	0.09	25.3
TRB5010x05M	※★◎	5 (3.5~5.0)	0.25	1.25	4500	2.56	0.07	3.18	0.13	31.3
TRB5010x05H	※★◎	5 (2.5~5.0)	0.30	1.50	5500	3.21	0.09	4.13	0.16	39.4
TRB5010x05VH	※★◎	5 (2.5~5.0)	0.40	2.00	6500	3.85	0.11	5.12	0.20	44.7
TRB5010x05SH	※★◎	5 (2.5~5.0)	0.50	2.50	7000	4.02	0.11	5.28	0.21	45.0
TRB5010x12L	※★◎	12 (6.0~13.8)	1.80	1.00	3500	1.83	0.05	2.26	0.09	25.3
TRB5010x12M	※★◎	12 (6.0~13.8)	2.40	1.25	4500	2.56	0.07	3.18	0.13	31.3
TRB5010x12H	※★◎	12 (6.0~13.8)	3.00	1.50	5500	3.21	0.09	4.13	0.16	39.4
TRB5010x12VH	※★◎	12 (6.0~13.8)	3.60	2.00	6500	3.85	0.11	5.12	0.20	44.7
TRB5010x12SH	※★◎	12 (6.0~13.8)	4.20	2.50	7000	4.02	0.11	5.28	0.21	45.0

X Bearing System ※：Sleeve ★：WRB ◎：Ball

★如果您需要的轉速或電壓或功能不在這份清單上，請與我們業務聯繫 Please contact us, if the SPEC you need is not in the list.

★產品詳細數據及功能請參閱承認書 Please see the approval sheet for more information . ★產品規格變更不另行通知 Specifications are subject to change without notice.

DC Blower Fan

TRB5010 U SERIES 50X50X10mm

DIMENSIONS DRAWING UNIT：mm

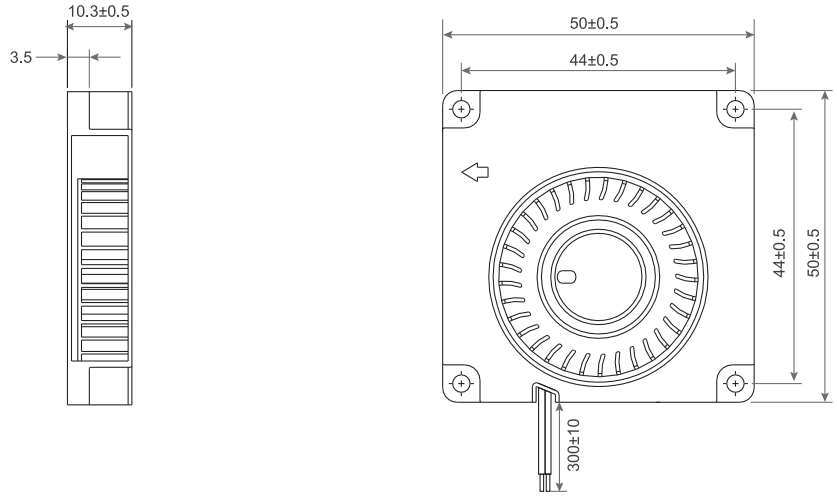

- Frame：Thermoplastic PBT UL94-V0
  外框材質：環保防火PBT
- Impeller：Thermoplastic PBT UL94-V0
  扇葉材質：環保防火PBT
- Bearing：※Sleeve・★WRB・◎Two Ball bearing
  軸承：※含油・★WRB・◎滾珠軸承
- Unit Weight：16g
  風扇單體重量：16克

P&Q Curve At Rated Voltage

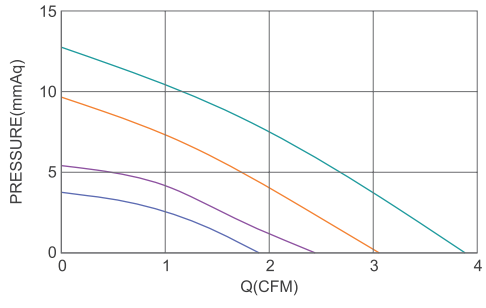

Model No.	Bearing Type	Voltage (VDC)	Current (A)	Power (W)	Speed (RPM)	Air Flow (CFM)	Air Flow (m^3/min)	Air Pressure (mmH₂O)	Air Pressure (Inch H₂O)	Noise (dBA)
TRB5010x05L	※◎★	5 (4.0~5.5)	0.05	0.3	3500	1.87	0.053	3.18	0.125	22.5
TRB5010x05M	※◎★	5 (4.0~5.5)	0.07	0.4	4500	2.40	0.068	5.64	0.222	28.0
TRB5010x05H	※◎★	5 (4.0~5.5)	0.12	0.6	5500	3.04	0.086	9.47	0.373	32.5
TRB5010x05VH	※◎★	5 (4.0~5.5)	0.16	0.8	6500	3.88	0.110	13.43	0.529	37.5
TRB5010x12L	※◎★	12 (7.0~13.2)	0.04	0.5	3500	1.87	0.053	3.18	0.125	22.5
TRB5010x12M	※◎★	12 (7.0~13.2)	0.05	0.6	4500	2.40	0.068	5.64	0.222	28.0
TRB5010x12H	※◎★	12 (7.0~13.2)	0.08	1.0	5500	3.04	0.086	9.47	0.373	32.5
TRB5010x12VH	※◎★	12 (7.0~13.2)	0.09	1.1	6500	3.88	0.110	13.43	0.529	37.5

X Bearing System ※：Sleeve ★：WRB ◎：Ball

★如果您需要的轉速或電壓或功能不在這份清單上，請與我們業務聯繫 Please contact us, if the SPEC you need is not in the list.

★產品詳細數據及功能請參閱承認書 Please see the approval sheet for more information . ★產品規格變更不另行通知 Specifications are subject to change without notice.

DC Blower Fan

TRB5015 SERIES 50X50X15mm

DIMENSIONS DRAWING UNIT：mm

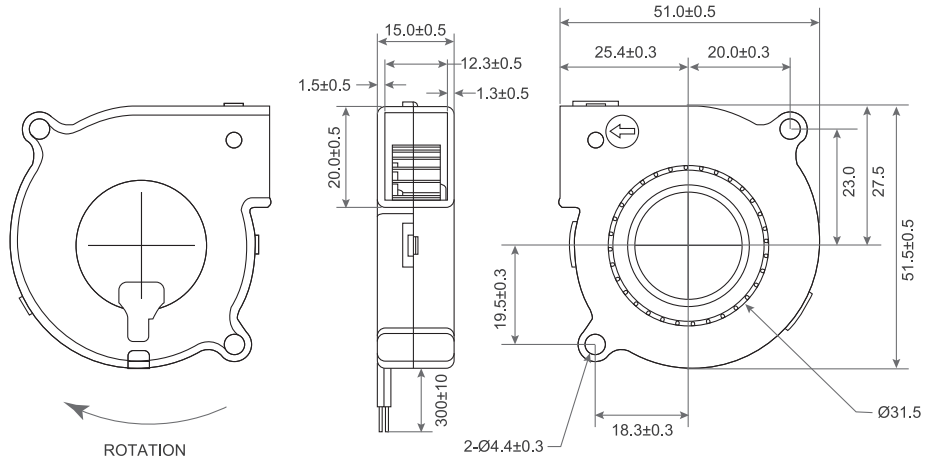

- ●Frame：Thermoplastic PBT UL94-V0
  外框材質：環保防火PBT
- ●Impeller：Thermoplastic PBT UL94-V0
  扇葉材質：環保防火PBT
- ●Bearing：★WRB・◎Two Ball bearing
  軸承：★WRB・◎滾珠軸承
- ●Unit Weight：26g
  風扇單體重量：26克

P&Q Curve At Rated Voltage

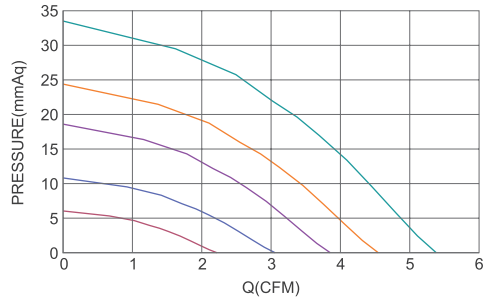

Model No.	Bearing Type	Voltage (VDC)	Current (A)	Power (W)	Speed (RPM)	Air Flow (CFM)	Air Flow (m^3/min)	Air Pressure (mmH_2O)	Air Pressure (Inch H_2O)	Noise (dBA)
TRB5015x05D	★◎	5 (4.5~5.5)	0.10	0.50	3000	2.28	0.06	6.19	0.24	24.5
TRB5015x05L	★◎	5 (4.5~5.5)	0.18	0.90	4000	3.04	0.09	11.00	0.43	31.2
TRB5015x05M	★◎	5 (4.5~5.5)	0.28	1.40	5000	3.80	0.11	17.19	0.68	38.0
TRB5015x05H	★◎	5 (4.5~5.5)	0.36	1.80	6000	4.56	0.13	24.76	0.97	39.8
TRB5015x12D	★◎	12 (7.0~14.0)	0.04	0.48	3000	2.28	0.06	6.19	0.24	24.5
TRB5015x12L	★◎	12 (7.0~14.0)	0.05	0.60	4000	3.04	0.09	11.00	0.43	31.2
TRB5015x12M	★◎	12 (7.0~14.0)	0.08	0.96	5000	3.80	0.11	17.19	0.68	38.0
TRB5015x12H	★◎	12 (7.0~14.0)	0.12	1.44	6000	4.56	0.13	24.76	0.97	39.8
TRB5015x12VH	★◎	12 (7.0~14.0)	0.14	1.68	7000	5.31	0.15	33.70	1.33	42.4
TRB5015x24M	★◎	24 (15.0~27.0)	0.06	1.44	5000	3.80	0.11	17.19	0.68	38.0
TRB5015x24H	★◎	24 (15.0~27.0)	0.07	1.68	6000	4.56	0.13	24.76	0.97	39.8
TRB5015x24VH	★◎	24 (15.0~27.0)	0.08	1.92	7000	5.31	0.15	33.70	1.33	42.4

x Bearing System ※：Sleeve ★：WRB ◎：Ball

★如果您需要的轉速或電壓或功能不在這份清單上，請與我們業務聯繫 Please contact us, if the SPEC you need is not in the list.

★產品詳細數據及功能請參閱承認書 Please see the approval sheet for more information . ★產品規格變更不另行通知 Specifications are subject to change without notice.

DC Blower Fan

TRB5015 SERIES 50X50X15mm

DIMENSIONS DRAWING UNIT：mm

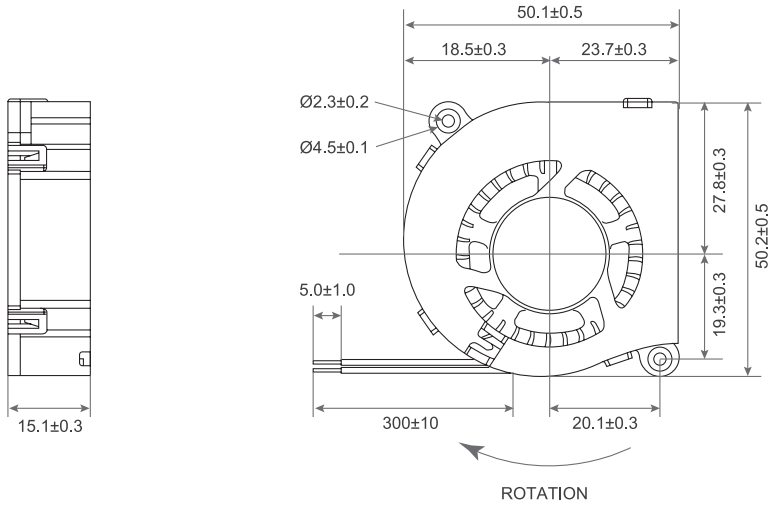

P&Q Curve At Rated Voltage

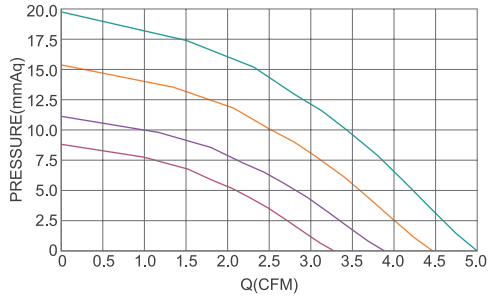

- Frame：Thermoplastic PBT UL94-V0
  外框材質：環保防火PBT
- Impeller：Thermoplastic PBT UL94-V0
  扇葉材質：環保防火PBT
- Bearing：★WRB・◎Two Ball bearing
  軸承：★WRB・◎滾珠軸承
- Unit Weight：26g
  風扇單體重量：26克

Model No.	Bearing Type	Voltage (VDC)	Current (A)	Power (W)	Speed (RPM)	Air Flow (CFM)	Air Flow (m^3/min)	Air Pressure (mmH2O)	Air Pressure (Inch H2O)	Noise (dBA)
TRB5015x05L	★◎	5 (4.0~6.0)	0.08	0.40	3700	2.7	0.08	5.79	0.23	25.8
TRB5015x05M	★◎	5 (4.0~6.0)	0.14	0.70	4500	3.3	0.09	8.56	0.34	30.5
TRB5015x05H	★◎	5 (4.0~6.0)	0.22	1.10	5200	3.8	0.11	11.43	0.45	34.4
TRB5015x05VH	★◎	5 (4.0~6.0)	0.34	1.70	6000	4.4	0.12	15.22	0.60	38.7
TRB5015x12L	★◎	12 (7.0~14.0)	0.04	0.50	3700	2.7	0.08	5.79	0.23	25.8
TRB5015x12M	★◎	12 (7.0~14.0)	0.07	0.80	4500	3.3	0.09	8.56	0.34	30.5
TRB5015x12H	★◎	12 (7.0~14.0)	0.11	1.30	5200	3.8	0.11	11.43	0.45	34.4
TRB5015x12VH	★◎	12 (7.0~14.0)	0.17	2.10	6000	4.4	0.12	15.22	0.60	38.7
TRB5015x12SH	★◎	12 (7.0~14.0)	0.25	3.00	6800	5.0	0.14	19.55	0.77	43.8
TRB5015x24H	★◎	24 (15.0~27.0)	0.05	1.20	5200	3.8	0.11	11.43	0.45	34.4
TRB5015x24VH	★◎	24 (15.0~27.0)	0.08	1.90	6000	4.4	0.12	15.22	0.60	38.7
TRB5015x24SH	★◎	24 (15.0~27.0)	0.13	3.10	6800	5.0	0.14	19.55	0.77	43.8

X Bearing System ※：Sleeve ★：WRB ◎：Ball

★如果您需要的轉速或電壓或功能不在這份清單上，請與我們業務聯繫 Please contact us, if the SPEC you need is not in the list.

★產品詳細數據及功能請參閱承認書 Please see the approval sheet for more information . ★產品規格變更不另行通知 Specifications are subject to change without notice.

DC Blower Fan

TRB5020 SERIES 50X50X20mm

DIMENSIONS DRAWING UNIT：mm

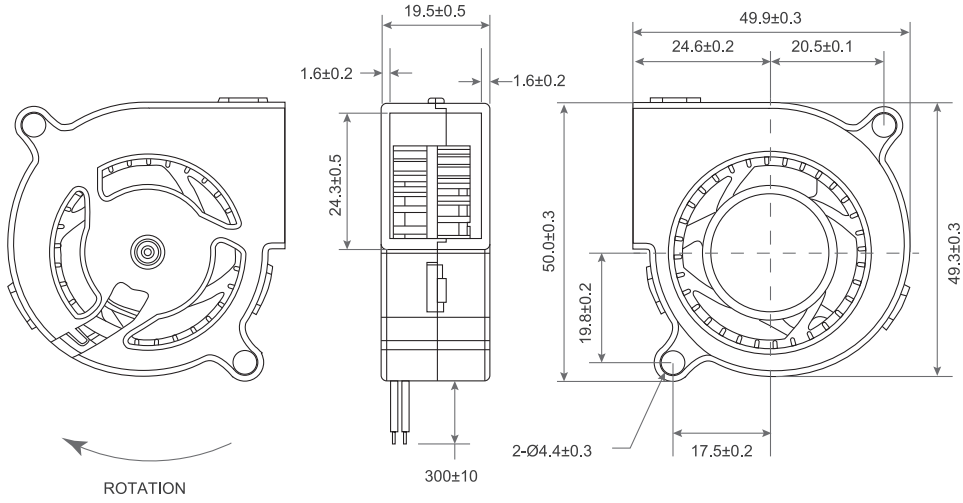

- Frame：Thermoplastic PBT UL94-V0
  外框材質：環保防火PBT
- Impeller：Thermoplastic PBT UL94-V0
  扇葉材質：環保防火PBT
- Bearing：★WRB・◎Two Ball bearing
  軸承：★WRB・◎滾珠軸承
- Unit Weight：26g
  風扇單體重量：26克

P&Q Curve At Rated Voltage

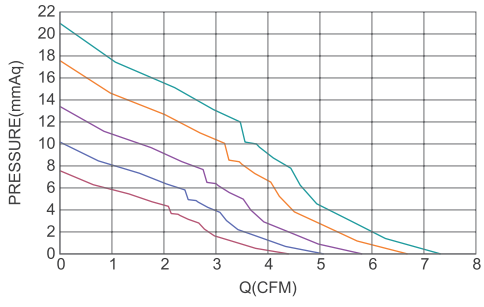

Model No.	Bearing Type	Voltage (VDC)	Current (A)	Power (W)	Speed (RPM)	Air Flow (CFM)	Air Flow (m^3/min)	Air Pressure (mmH_2O)	Air Pressure (Inch H_2O)	Noise (dBA)
TRB5020x05D	★◎	5 (4.0~6.0)	0.13	0.65	3000	2.91	0.08	3.35	0.13	24.6
TRB5020x05L	★◎	5 (4.0~6.0)	0.20	1.00	4500	4.36	0.12	7.54	0.30	34.0
TRB5020x05M	★◎	5 (4.0~6.0)	0.29	1.45	5200	5.04	0.14	10.07	0.40	37.0
TRB5020x05H	★◎	5 (4.0~6.0)	0.42	2.10	6000	5.81	0.16	13.41	0.53	41.8
TRB5020x12D	★◎	12 (7.0~14.0)	0.06	0.72	3000	2.91	0.08	3.35	0.13	24.6
TRB5020x12L	★◎	12 (7.0~14.0)	0.09	1.08	4500	4.36	0.12	7.54	0.30	34.0
TRB5020x12M	★◎	12 (7.0~14.0)	0.13	1.56	5200	5.04	0.14	10.07	0.40	37.0
TRB5020x12H	★◎	12 (7.0~14.0)	0.24	2.88	6000	5.81	0.16	13.41	0.53	41.8
TRB5020x12VH	★◎	12 (7.0~14.0)	0.27	3.24	6800	6.59	0.19	17.22	0.68	45.0
TRB5020x12SH	★◎	12 (7.0~14.0)	0.32	3.84	7500	7.27	0.21	20.95	0.82	49.3
TRB5020x24D	★◎	24 (15.0~27.0)	0.03	0.72	3000	2.91	0.08	3.35	0.13	24.6
TRB5020x24L	★◎	24 (15.0~27.0)	0.04	0.96	4500	4.36	0.12	7.54	0.30	34.0
TRB5020x24M	★◎	24 (15.0~27.0)	0.06	1.44	5200	5.04	0.14	10.07	0.40	37.0
TRB5020x24H	★◎	24 (15.0~27.0)	0.12	2.88	6000	5.81	0.16	13.41	0.53	41.8
TRB5020x24VH	★◎	24 (15.0~27.0)	0.14	3.36	6800	6.59	0.19	17.22	0.68	45.0
TRB5020x24SH	★◎	24 (15.0~27.0)	0.17	4.08	7500	7.27	0.21	20.95	0.82	49.3

X Bearing System ※：Sleeve ★：WRB ◎：Ball

★如果您需要的轉速或電壓或功能不在這份清單上，請與我們業務聯繫 Please contact us, if the SPEC you need is not in the list.

★產品詳細數據及功能請參閱承認書 Please see the approval sheet for more information . ★產品規格變更不另行通知 Specifications are subject to change without notice.

DC Blower Fan

TRB5020 O SERIES 50X50X20mm

DIMENSIONS DRAWING UNIT：mm

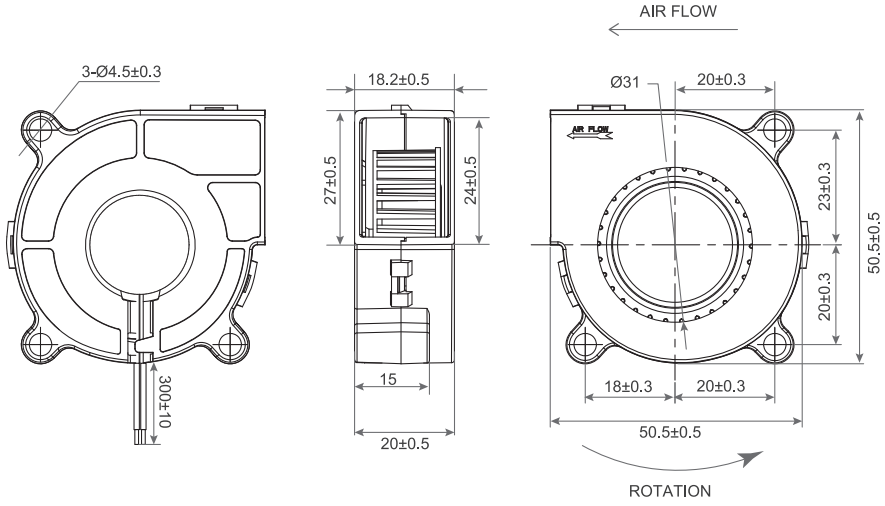

- ●Frame：Thermoplastic PBT UL94-V0
  外框材質：環保防火PBT
- ●Impeller：Thermoplastic PBT UL94-V0
  扇葉材質：環保防火PBT
- ●Bearing：※Sleeve・★WRB・◎Two Ball bearing
  軸承：※含油・★WRB・◎滾珠軸承
- ●Unit Weight：28g
  風扇單體重量：28克

P&Q Curve At Rated Voltage

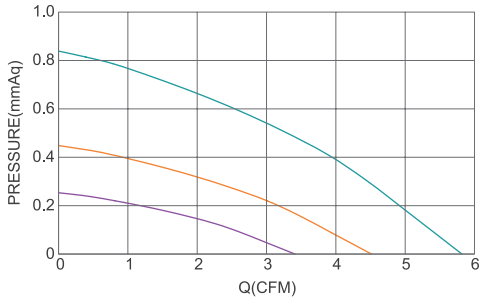

Model No.	Bearing Type	Voltage (VDC)	Current (A)	Power (W)	Speed (RPM)	Air Flow (CFM)	Air Flow (m^3/min)	Air Pressure (mmH_2O)	Air Pressure (Inch H_2O)	Noise (dBA)
TRB5020x05L	※★◎	5 (4.0~5.8)	0.18	0.90	4000	3.40	0.10	0.25	6.30	31.5
TRB5020x05M	※★◎	5 (4.0~5.8)	0.32	1.60	5000	4.50	0.13	0.46	11.70	39.1
TRB5020x05H	※★◎	5 (4.0~5.8)	0.50	2.50	6000	5.80	0.16	0.84	21.30	42.2
TRB5020x12L	※★◎	12 (7.0~13.8)	0.09	1.08	4000	3.40	0.10	0.25	6.30	31.5
TRB5020x12M	※★◎	12 (7.0~13.8)	0.18	2.16	5000	4.50	0.13	0.46	11.70	39.1
TRB5020x12H	※★◎	12 (7.0~13.8)	0.32	3.84	6000	5.80	0.16	0.84	21.30	42.2
TRB5020x24L	※★◎	24 (14.0~27.6)	0.06	1.44	4000	3.40	0.10	0.25	6.30	31.5
TRB5020x24M	※★◎	24 (14.0~27.6)	0.09	2.16	5000	4.50	0.13	0.46	11.70	39.1
TRB5020x24H	※★◎	24 (14.0~27.6)	0.14	3.36	6000	5.80	0.16	0.84	21.30	42.2

X Bearing System ※：Sleeve ★：WRB ◎：Ball

★如果您需要的轉速或電壓或功能不在這份清單上，請與我們業務聯繫 Please contact us, if the SPEC you need is not in the list.

★產品詳細數據及功能請參閱承認書 Please see the approval sheet for more information . ★產品規格變更不另行通知 Specifications are subject to change without notice.

DC Blower Fan

TRB5025 G SERIES 50X50X25mm

DIMENSIONS DRAWING UNIT：mm

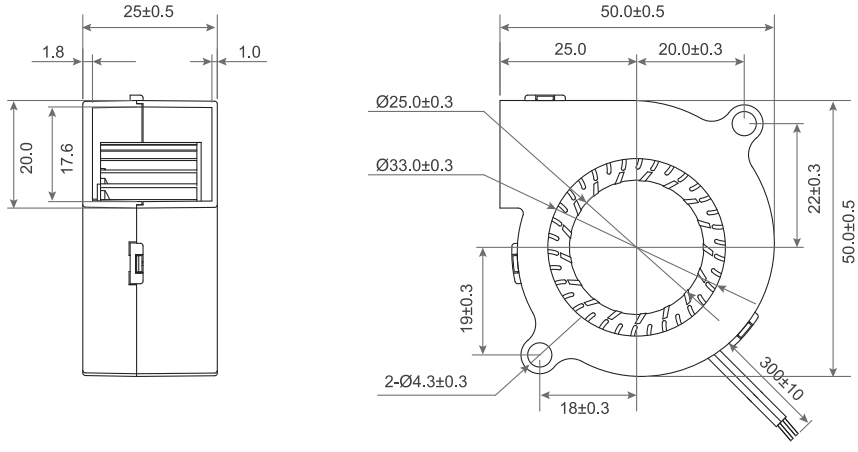

- Frame：Thermoplastic PBT UL94-V0
  外框材質：環保防火PBT
- Impeller：Thermoplastic PBT UL94-V0
  扇葉材質：環保防火PBT
- Bearing：※Sleeve・★WRB・◎Two Ball bearing
  軸承：※含油・★WRB・◎滾珠軸承
- Unit Weight：31.5g
  風扇單體重量：31.5克

P&Q Curve At Rated Voltage

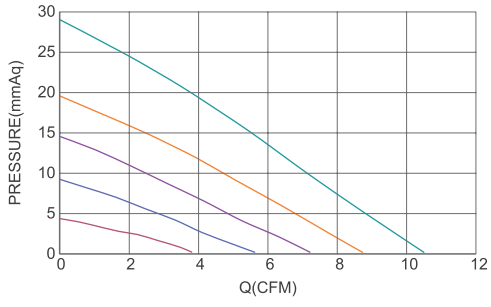

Model No.	Bearing Type	Voltage (VDC)	Current (A)	Power (W)	Speed (RPM)	Air Flow (CFM)	Air Flow (m^3/min)	Air Pressure (mmH2O)	Air Pressure (Inch H2O)	Noise (dBA)
TRB5025x12L	※◎★	12 (6.0~13.8)	0.20	2.40	3000	3.84	0.11	4.51	0.17	27.7
TRB5025x12M	※◎★	12 (6.0~13.8)	0.25	3.00	4000	5.62	0.16	9.16	0.36	35.0
TRB5025x12H	※◎★	12 (6.0~13.8)	0.30	3.60	5000	7.23	0.20	14.62	0.58	39.0
TRB5025x12VH	※◎★	12 (6.0~13.8)	0.35	4.20	6000	8.62	0.24	19.81	0.78	43.9
TRB5025x12SH	※◎★	12 (6.0~13.8)	0.45	5.40	8000	10.54	0.30	28.54	1.12	58.4

X Bearing System ※：Sleeve ★：WRB ◎：Ball

★如果您需要的轉速或電壓或功能不在這份清單上，請與我們業務聯繫 Please contact us, if the SPEC you need is not in the list.

★產品詳細數據及功能請參閱承認書 Please see the approval sheet for more information . ★產品規格變更不另行通知 Specifications are subject to change without notice.

DC Blower Fan

TRB6015 SERIES 60X60X15mm

DIMENSIONS DRAWING UNIT：mm

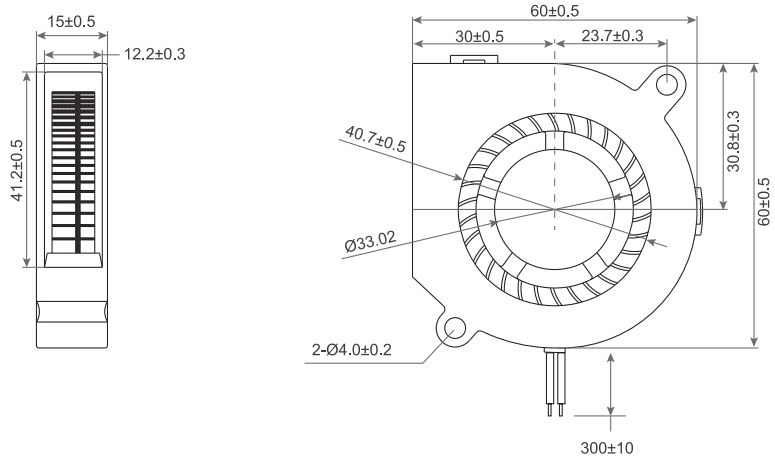

- Frame：Thermoplastic PBT UL94-V0
  外框材質：環保防火PBT
- Impeller：Thermoplastic PBT UL94-V0
  扇葉材質：環保防火PBT
- Bearing：※Sleeve・★WRB・◎Two Ball bearing
  軸承：※含油・★WRB・◎滾珠軸承
- Unit Weight：64g
  風扇單體重量：64克

P&Q Curve At Rated Voltage

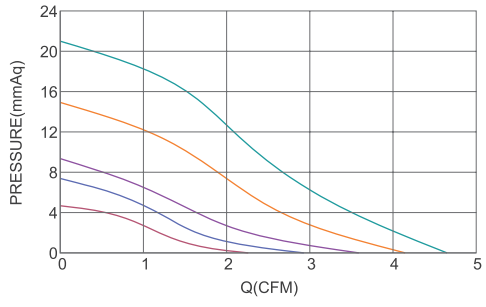

Model No.	Bearing Type	Voltage (VDC)	Current (A)	Power (W)	Speed (RPM)	Air Flow (CFM)	Air Flow (m^3/min)	Air Pressure (mmH₂O)	Air Pressure (Inch H₂O)	Noise (dBA)
TRB6015x12D	※◎★	12 (6.0~13.5)	0.10	1.2	2500	2.24	0.063	3.31	0.13	24.4
TRB6015x12L	※◎★	12 (6.0~13.5)	0.14	1.7	3000	2.78	0.079	5.12	0.20	29.5
TRB6015x12M	※◎★	12 (6.0~13.5)	0.22	2.6	3500	3.16	0.090	7.13	0.28	33.6
TRB6015x12H	※◎★	12 (6.0~13.5)	0.30	3.6	4000	3.67	0.104	9.72	0.38	36.9
TRB6015x12VH	※◎★	12 (7.0~14.0)	0.35	4.2	4500	4.13	0.117	14.06	0.55	41.2
TRB6015x12SH	※◎★	12 (7.0~14.0)	0.40	4.8	5000	4.52	0.130	20.97	0.83	45.0
TRB6015x24D	※◎★	24 (18.0~26.5)	0.05	1.2	2500	2.24	0.063	3.31	0.13	24.4
TRB6015x24L	※◎★	24 (18.0~26.5)	0.07	1.7	3000	2.78	0.079	5.12	0.20	29.5
TRB6015x24M	※◎★	24 (18.0~26.5)	0.11	2.6	3500	3.16	0.090	7.13	0.28	33.6
TRB6015x24H	※◎★	24 (18.0~26.5)	0.15	3.6	4000	3.67	0.104	9.72	0.38	36.9
TRB6015x24VH	※◎★	24 (18.0~26.5)	0.16	3.8	4500	4.13	0.117	14.06	0.55	41.2
TRB6015x24SH	※◎★	24 (18.0~26.5)	0.18	4.3	5000	4.52	0.130	20.97	0.83	45.0

X Bearing System ※：Sleeve ★：WRB ◎：Ball

★如果您需要的轉速或電壓或功能不在這份清單上，請與我們業務聯繫 Please contact us, if the SPEC you need is not in the list.

★產品詳細數據及功能請參閱承認書 Please see the approval sheet for more information . ★產品規格變更不另行通知 Specifications are subject to change without notice.

DC Blower Fan

TRB6025 SERIES 60X60X25mm

DIMENSIONS DRAWING UNIT：mm

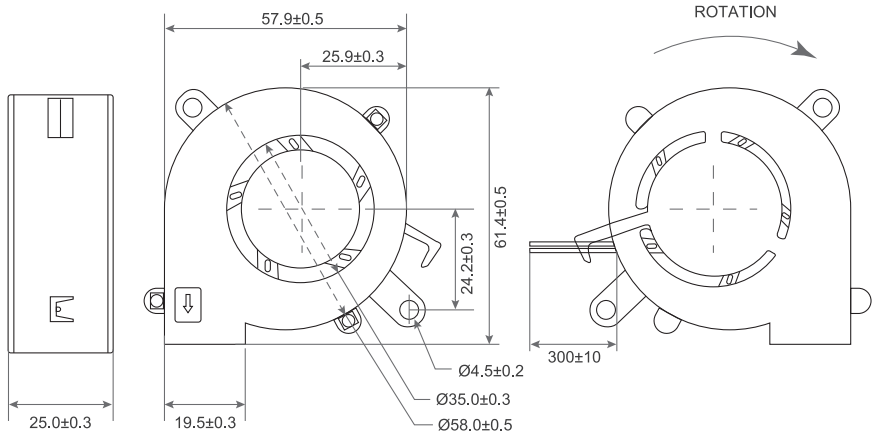

- Frame：Thermoplastic PBT UL94-V0
  外框材質：環保防火PBT
- Impeller：Thermoplastic PBT UL94-V0
  扇葉材質：環保防火PBT
- Bearing：※Sleeve・★WRB・◎Two Ball bearing
  軸承：※含油・★WRB・◎滾珠軸承
- Unit Weight：55g
  風扇單體重量：55克

P&Q Curve At Rated Voltage

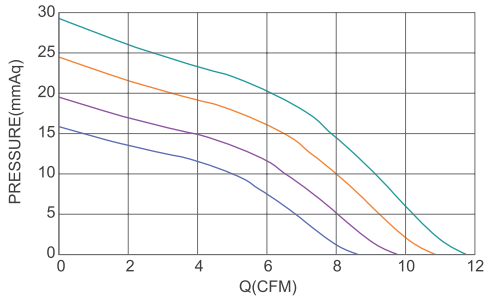

Model No.	Bearing Type	Voltage (VDC)	Current (A)	Power (W)	Speed (RPM)	Air Flow (CFM)	Air Flow (m^3/min)	Air Pressure (mmH_2O)	Air Pressure (Inch H_2O)	Noise (dBA)
TRB6025x05D	※◎★	5 (4.0~6.0)	0.20	1.00	3000	6.51	0.18	8.70	0.34	31.4
TRB6025x05L	※◎★	5 (4.0~6.0)	0.29	1.45	3500	7.59	0.21	11.84	0.47	35.2
TRB6025x05M	※◎★	5 (4.0~6.0)	0.36	1.80	4000	8.67	0.25	15.47	0.61	38.2
TRB6025x12D	※◎★	12 (7.0~14.0)	0.08	0.96	3000	6.51	0.18	8.70	0.34	31.4
TRB6025x12L	※◎★	12 (7.0~14.0)	0.12	1.44	3500	7.59	0.21	11.84	0.47	35.2
TRB6025x12M	※◎★	12 (7.0~14.0)	0.15	1.80	4000	8.67	0.25	15.47	0.61	38.2
TRB6025x12H	※◎★	12 (7.0~14.0)	0.21	2.52	4500	9.76	0.28	19.58	0.77	41.2
TRB6025x12VH	※◎★	12 (7.0~14.0)	0.28	3.36	5000	10.84	0.31	24.17	0.95	45.0
TRB6025x12SH	※◎★	12 (7.0~14.0)	0.40	4.56	5500	11.93	0.34	29.25	1.15	47.8
TRB6025x24L	※◎★	24 (15.0~27.0)	0.06	1.44	3500	7.59	0.21	11.84	0.47	35.2
TRB6025x24M	※◎★	24 (15.0~27.0)	0.08	1.80	4000	8.67	0.25	15.47	0.61	38.2
TRB6025x24H	※◎★	24 (15.0~27.0)	0.11	2.52	4500	9.76	0.28	19.58	0.77	41.2
TRB6025x24VH	※◎★	24 (15.0~27.0)	0.14	3.36	5000	10.84	0.31	24.17	0.95	45.0
TRB6025x24SH	※◎★	24 (15.0~27.0)	0.20	4.56	5500	11.93	0.34	29.25	1.15	47.8

X Bearing System ※：Sleeve ★：WRB ◎：Ball

★如果您需要的轉速或電壓或功能不在這份清單上，請與我們業務聯繫 Please contact us, if the SPEC you need is not in the list.

★產品詳細數據及功能請參閱承認書 Please see the approval sheet for more information . ★產品規格變更不另行通知 Specifications are subject to change without notice.

DC Blower Fan

TRB6030 G SERIES 60X60X30mm

DIMENSIONS DRAWING UNIT：mm

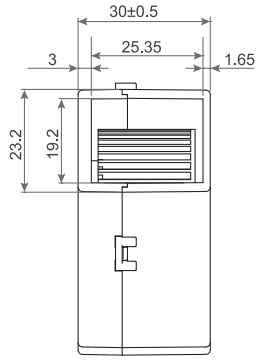

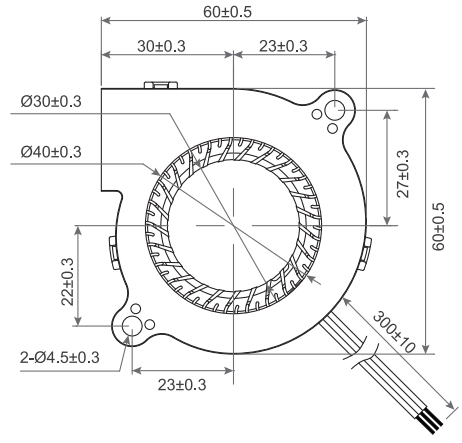

- Frame：Thermoplastic PBT UL94-V0
  外框材質：環保防火PBT
- Impeller：Thermoplastic PBT UL94-V0
  扇葉材質：環保防火PBT
- Bearing：※Sleeve・★WRB・◎Two Ball bearing
  軸承：※含油・★WRB・◎滾珠軸承
- Unit Weight：76g
  風扇單體重量：76克

P&Q Curve At Rated Voltage

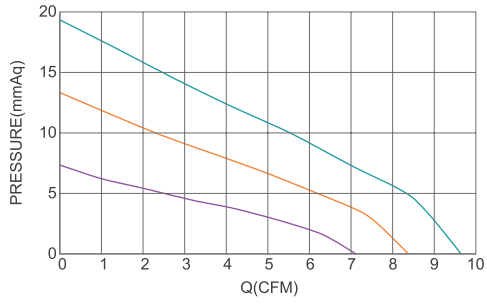

Model No.	Bearing Type	Voltage (VDC)	Current (A)	Power (W)	Speed (RPM)	Air Flow (CFM)	Air Flow (m^3/min)	Air Pressure (mmH_2O)	Air Pressure (Inch H_2O)	Noise (dBA)
TRB6030x12L	★◎	12 (6.0~13.8)	0.24	2.88	4000	7.12	0.20	7.32	0.29	40.3
TRB6030x12M	★◎	12 (6.0~13.8)	0.30	3.60	5000	8.39	0.24	13.34	0.53	43.2
TRB6030x12H	★◎	12 (6.0~13.8)	0.40	4.80	6000	9.65	0.27	19.35	0.76	46.2

X Bearing System ※：Sleeve ★：WRB ◎：Ball

★如果您需要的轉速或電壓或功能不在這份清單上，請與我們業務聯繫 Please contact us, if the SPEC you need is not in the list.

★產品詳細數據及功能請參閱承認書 Please see the approval sheet for more information . ★產品規格變更不另行通知 Specifications are subject to change without notice.

DC Blower Fan

TRB7515 U SERIES 75X77X15mm

DIMENSIONS DRAWING UNIT：mm

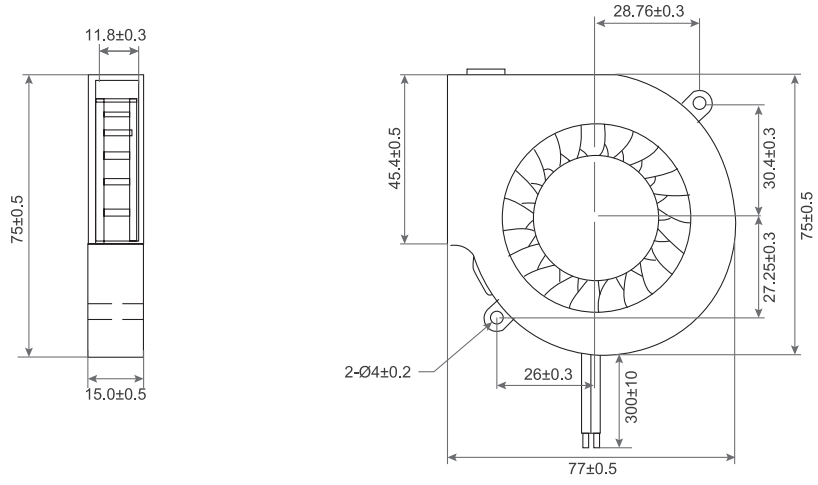

- Frame：Thermoplastic PBT UL94-V0
  外框材質：環保防火PBT
- Impeller：Thermoplastic PBT UL94-V0
  扇葉材質：環保防火PBT
- Bearing：※Sleeve・★WRB・◎Two Ball bearing
  軸承：※含油・★WRB・◎滾珠軸承
- Unit Weight：66g
  風扇單體重量：66克

P&Q Curve At Rated Voltage

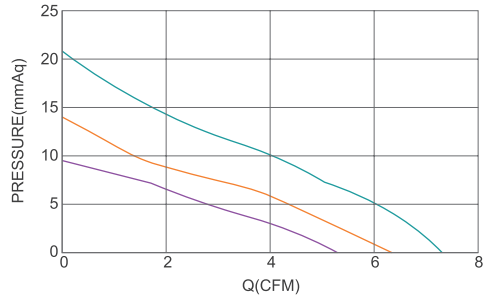

Model No.	Bearing Type	Voltage (VDC)	Current (A)	Power (W)	Speed (RPM)	Air Flow (CFM)	Air Flow (m^3/min)	Air Pressure (mmH_2O)	Air Pressure (Inch H_2O)	Noise (dBA)
TRB7515x12D	※★◎	12 (6.0~13.5)	0.10	1.20	2000	4.2	0.12	5.29	0.21	30.2
TRB7515x12L	※★◎	12 (6.0~13.5)	0.14	1.68	2500	5.2	0.15	9.30	0.34	35.7
TRB7515x12M	※★◎	12 (6.0~13.5)	0.22	2.64	3000	6.3	0.18	13.81	0.55	39.6
TRB7515x12H	※★◎	12 (6.0~13.5)	0.30	3.60	3500	7.2	0.20	20.66	0.82	44.4
TRB7515x24D	※★◎	24 (18.0~26.5)	0.05	1.20	2000	4.2	0.12	5.29	0.21	30.2
TRB7515x24L	※★◎	24 (18.0~26.5)	0.07	1.68	2500	5.2	0.15	9.30	0.34	35.7
TRB7515x24M	※★◎	24 (18.0~26.5)	0.11	2.64	3000	6.3	0.18	13.81	0.55	39.6
TRB7515x24H	※★◎	24 (18.0~26.5)	0.15	3.60	3500	7.2	0.20	20.66	0.82	44.4

(x) Bearing System ※：Sleeve ★：WRB ◎：Ball

★如果您需要的轉速或電壓或功能不在這份清單上，請與我們業務聯繫 Please contact us, if the SPEC you need is not in the list.

★產品詳細數據及功能請參閱承認書 Please see the approval sheet for more information . ★產品規格變更不另行通知 Specifications are subject to change without notice.

DC Blower Fan

TRB7525 SERIES 75X75X25mm

DIMENSIONS DRAWING UNIT：mm

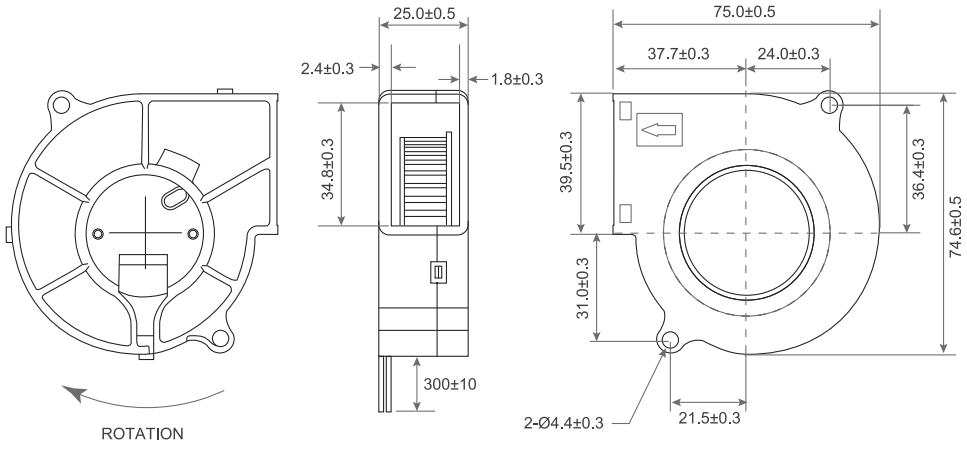

- Frame：Thermoplastic PBT UL94-V0
  外框材質：環保防火PBT
- Impeller：Thermoplastic PBT UL94-V0
  扇葉材質：環保防火PBT
- Bearing：※Sleeve・★WRB・◎Two Ball bearing
  軸承：※含油・★WRB・◎滾珠軸承
- Unit Weight：70g
  風扇單體重量：70克

P&Q Curve At Rated Voltage

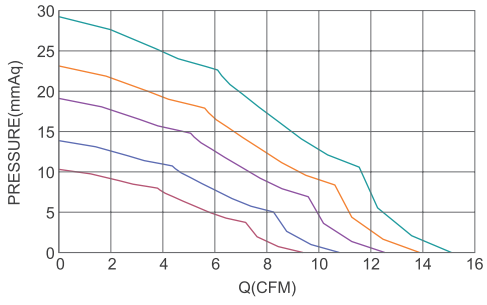

Model No.	Bearing Type	Voltage (VDC)	Current (A)	Power (W)	Speed (RPM)	Air Flow (CFM)	Air Flow (m^3/min)	Air Pressure (mmH2O)	Air Pressure (Inch H2O)	Noise (dBA)
TRB7525x05D	※★◎	5 (4.0~6.0)	0.24	1.20	2500	7.74	0.22	7.07	0.28	32.3
TRB7525x05L	※★◎	5 (4.0~6.0)	0.34	1.70	3000	9.29	0.26	10.18	0.40	38.1
TRB7525x05M	※★◎	5 (4.0~6.0)	0.50	2.50	3500	10.84	0.31	13.86	0.55	42.1
TRB7525x12D	※★◎	12 (7.0~14.0)	0.10	1.20	2500	7.74	0.22	7.07	0.28	32.3
TRB7525x12L	※★◎	12 (7.0~14.0)	0.14	1.68	3000	9.29	0.26	10.18	0.40	38.1
TRB7525x12M	※★◎	12 (7.0~14.0)	0.21	2.52	3500	10.84	0.31	13.86	0.55	42.1
TRB7525x12H	※★◎	12 (7.0~14.0)	0.30	3.60	4000	12.39	0.35	18.10	0.71	45.6
TRB7525x12VH	※★◎	12 (7.0~14.0)	0.41	4.92	4500	13.93	0.39	22.91	0.90	49.1
TRB7525x12SH	※★◎	12 (7.0~14.0)	0.60	7.20	5000	15.48	0.44	28.28	1.11	51.8
TRB7525x24L	※★◎	24 (15.0~27.0)	0.07	1.68	3000	9.29	0.26	10.18	0.40	38.1
TRB7525x24M	※★◎	24 (15.0~27.0)	0.11	2.64	3500	10.84	0.31	13.86	0.55	42.1
TRB7525x24H	※★◎	24 (15.0~27.0)	0.15	3.60	4000	12.39	0.35	18.10	0.71	45.6
TRB7525x24VH	※★◎	24 (15.0~27.0)	0.21	5.04	4500	13.93	0.39	22.91	0.90	49.1
TRB7525x24SH	※★◎	24 (15.0~27.0)	0.30	7.20	5000	15.48	0.44	28.28	1.11	51.8

x Bearing System ※：Sleeve ★：WRB ◎：Ball

★如果您需要的轉速或電壓或功能不在這份清單上，請與我們業務聯繫 Please contact us, if the SPEC you need is not in the list.

★產品詳細數據及功能請參閱承認書 Please see the approval sheet for more information . ★產品規格變更不另行通知 Specifications are subject to change without notice.

DC Blower Fan

TRB7530 SERIES 75X75X30mm

DIMENSIONS DRAWING UNIT：mm

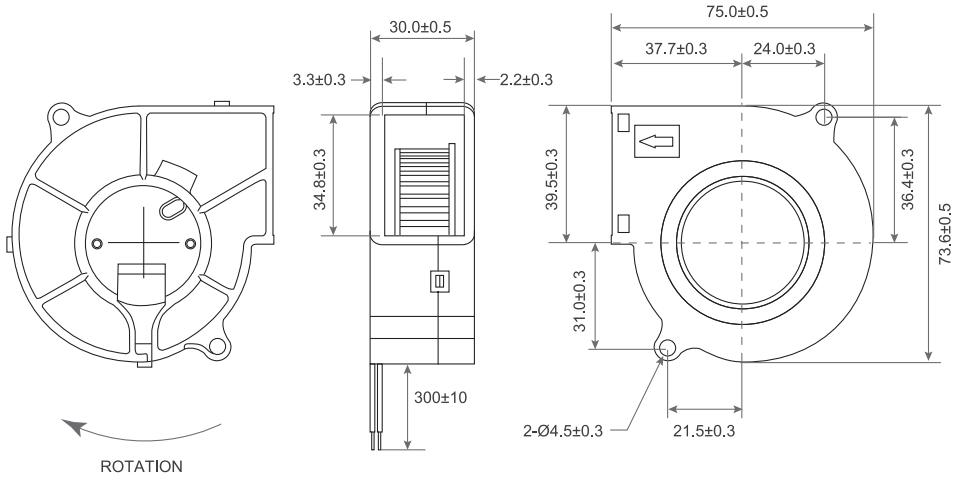

- Frame：Thermoplastic PBT UL94-V0
  外框材質：環保防火PBT
- Impeller：Thermoplastic PBT UL94-V0
  扇葉材質：環保防火PBT
- Bearing：※Sleeve・★WRB・◎Two Ball bearing
  軸承：※含油・★WRB・◎滾珠軸承
- Unit Weight：69g
  風扇單體重量：69克

P&Q Curve At Rated Voltage

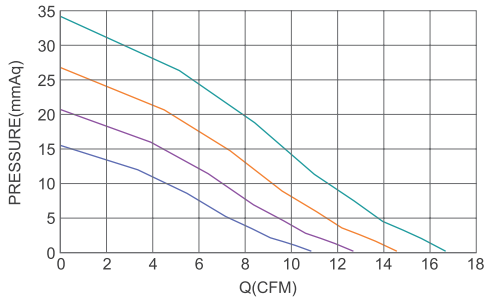

Model No.	Bearing Type	Voltage (VDC)	Current (A)	Power (W)	Speed (RPM)	Air Flow (CFM)	Air Flow (m^3/min)	Air Pressure (mmH_2O)	Air Pressure (Inch H_2O)	Noise (dBA)
TRB7530x12D	※★◎	12 (7.0~14.0)	0.13	1.56	2000	7.61	0.22	7.44	0.29	28.5
TRB7530x12L	※★◎	12 (7.0~14.0)	0.16	1.92	2500	9.42	0.27	11.41	0.45	33.0
TRB7530x12M	※★◎	12 (7.0~14.0)	0.22	2.64	3000	10.87	0.31	15.19	0.60	36.1
TRB7530x12H	※★◎	12 (7.0~14.0)	0.31	3.72	3500	12.68	0.36	20.67	0.81	39.5
TRB7530x12VH	※★◎	12 (7.0~14.0)	0.36	4.32	4000	14.49	0.41	27.00	1.06	43.1
TRB7530x12SH	※★◎	12 (7.0~14.0)	0.44	5.28	4500	16.30	0.46	34.17	1.35	45.8
TRB7530x24D	※★◎	24 (15.0~27.0)	0.06	1.44	2000	7.61	0.22	7.44	0.29	28.5
TRB7530x24L	※★◎	24 (15.0~27.0)	0.08	1.92	2500	9.42	0.27	11.41	0.45	33.0
TRB7530x24M	※★◎	24 (15.0~27.0)	0.11	2.64	3000	10.87	0.31	15.19	0.60	36.1
TRB7530x24H	※★◎	24 (15.0~27.0)	0.16	3.84	3500	12.68	0.36	20.67	0.81	39.5
TRB7530x24VH	※★◎	24 (15.0~27.0)	0.18	4.32	4000	14.49	0.41	27.00	1.06	43.1
TRB7530x24SH	※★◎	24 (15.0~27.0)	0.22	5.28	4500	16.30	0.46	34.17	1.35	45.8

X Bearing System ※：Sleeve ★：WRB ◎：Ball

★如果您需要的轉速或電壓或功能不在這份清單上，請與我們業務聯繫 Please contact us, if the SPEC you need is not in the list.

★產品詳細數據及功能請參閱承認書 Please see the approval sheet for more information . ★產品規格變更不另行通知 Specifications are subject to change without notice.

DC Blower Fan

TRB8028 G SERIES 80X80X28mm

DIMENSIONS DRAWING UNIT：mm

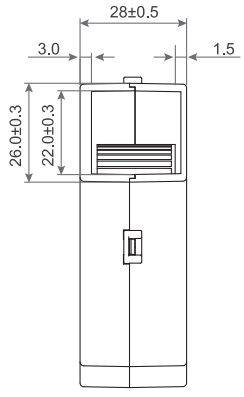

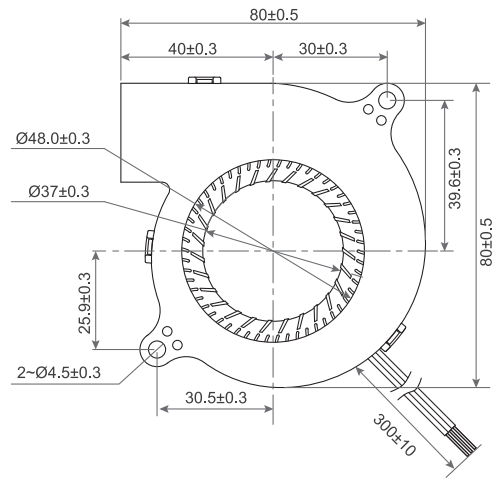

- Frame：Thermoplastic PBT UL94-V0
  外框材質：環保防火PBT
- Impeller：Thermoplastic PBT UL94-V0
  扇葉材質：環保防火PBT
- Bearing：※Sleeve・★WRB・◎Two Ball bearing
  軸承：※含油・★WRB・◎滾珠軸承
- Unit Weight：115g
  風扇單體重量：115克

P&Q Curve At Rated Voltage

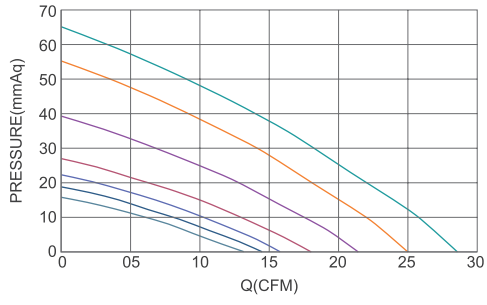

Model No.	Bearing Type	Voltage (VDC)	Current (A)	Power (W)	Speed (RPM)	Air Flow (CFM)	Air Flow (m^3/min)	Air Pressure (mmH2O)	Air Pressure (Inch H2O)	Noise (dBA)
TRB8028x12L	※★◎	12 (5.0~13.8)	0.32	1.00	3500	13.19	0.37	15.68	0.62	42.9
TRB8028x12M	※★◎	12 (5.0~13.8)	0.37	1.25	4000	14.56	0.41	19.04	0.75	45.0
TRB8028x12H	※★◎	12 (5.0~13.8)	0.42	1.50	4500	15.81	0.45	22.33	0.88	47.8
TRB8028x24L	※★◎	24 (15.0~32.0)	0.80	2.00	5000	17.97	0.51	27.15	1.01	49.1
TRB8028x24M	※★◎	24 (15.0~32.0)	0.90	2.50	6000	21.49	0.61	39.29	1.55	53.7
TRB8028x24H	※★◎	24 (15.0~32.0)	1.00	1.00	7000	25.01	0.71	55.21	2.18	57.3
TRB8028x24VH	※★◎	24 (15.0~32.0)	1.20	1.25	8000	28.59	0.81	65.09	2.56	59.7

X Bearing System ※：Sleeve ★：WRB ◎：Ball

★如果您需要的轉速或電壓或功能不在這份清單上，請與我們業務聯繫 Please contact us, if the SPEC you need is not in the list.

★產品詳細數據及功能請參閱承認書 Please see the approval sheet for more information . ★產品規格變更不另行通知 Specifications are subject to change without notice.

DC Blower Fan

TRB9325 G SERIES 93X93X25mm

- Frame：Thermoplastic PBT UL94-V0
  外框材質：環保防火PBT
- Impeller：Thermoplastic PBT UL94-V0
  扇葉材質：環保防火PBT
- Bearing：※Sleeve ・★WRB ・◎Two Ball
  軸承：※含油・★WRB・◎滾珠軸承
- Unit Weight：121g
  風扇單體重量：121克

P&Q Curve | At Rated Voltage

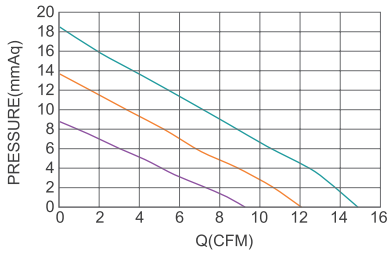

DIMENSIONS DRAWING | UNIT：mm

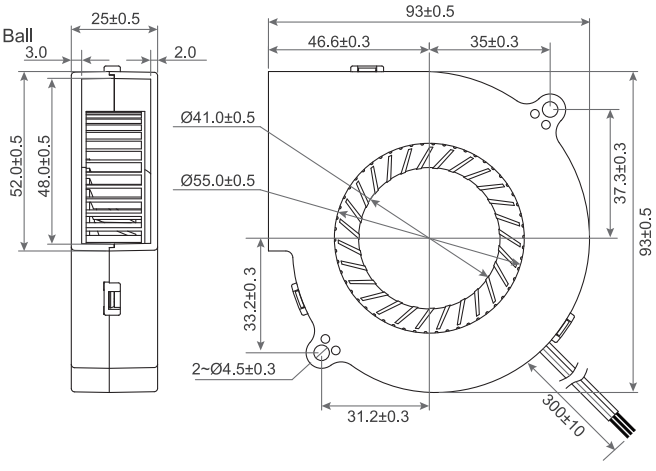

Model No.	Bearing Type	Voltage (VDC)	Current (A)	Power (W)	Speed (RPM)	Air Flow (CFM)	Air Flow (m^3/min)	Air Pressure (mmH_2O)	Air Pressure (Inch H_2O)	Noise (dBA)
TRB9325x12L	※★◎	12 (6.0~13.8)	0.32	3.84	2000	9.24	0.26	8.85	0.35	35.5
TRB9325x12M	※★◎	12 (6.0~13.8)	0.37	4.44	2500	12.05	0.34	13.71	0.54	41.6
TRB9325x12H	※★◎	12 (6.0~13.8)	0.42	5.04	3000	14.86	0.42	18.56	0.73	48.0

DC Blower Fan

TRB9330 G SERIES 93X93X30mm

- Frame：Thermoplastic PBT UL94-V0
  外框材質：環保防火PBT
- Impeller：Thermoplastic PBT UL94-V0
  扇葉材質：環保防火PBT
- Bearing：※Sleeve ・★WRB ・◎Two Ball
  軸承：※含油・★WRB・◎滾珠軸承
- Unit Weight：135g
  風扇單體重量：135克

P&Q Curve | At Rated Voltage

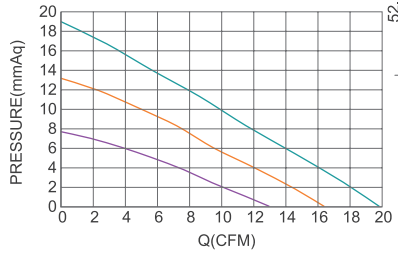

DIMENSIONS DRAWING | UNIT：mm

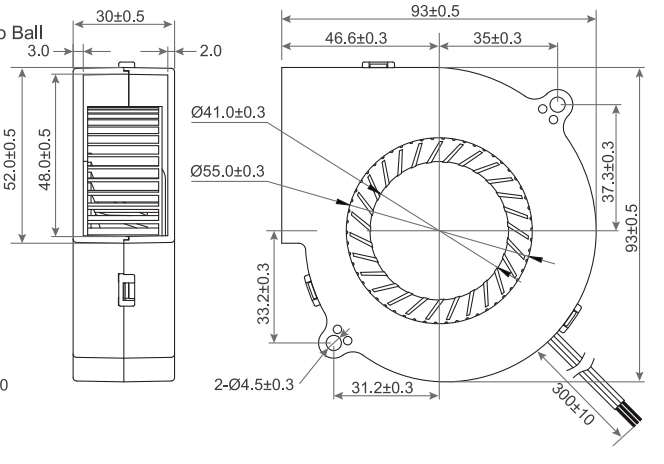

Model No.	Bearing Type	Voltage (VDC)	Current (A)	Power (W)	Speed (RPM)	Air Flow (CFM)	Air Flow (m^3/min)	Air Pressure (mmH_2O)	Air Pressure (Inch H_2O)	Noise (dBA)
TRB9330x12L	※★◎	12 (6.0~13.8)	0.32	3.84	2000	12.98	0.37	7.71	0.30	38.2
TRB9330x12M	※★◎	12 (6.0~13.8)	0.37	4.44	2500	16.43	0.46	13.18	0.52	44.2
TRB9330x12H	※★◎	12 (6.0~13.8)	0.42	5.04	3000	19.86	0.56	18.95	0.75	48.0

(X) Bearing System ※：Sleeve ★：WRB ◎：Ball

★如果您需要的轉速或電壓或功能不在這份清單上，請與我們業務聯繫 Please contact us, if the SPEC you need is not in the list.

★產品詳細數據及功能請參閱承認書 Please see the approval sheet for more information . ★產品規格變更不另行通知 Specifications are subject to change without notice.

DC Blower Fan

TRB9725 U SERIES 98X101.3x56.6mm

DIMENSIONS DRAWING UNIT：mm

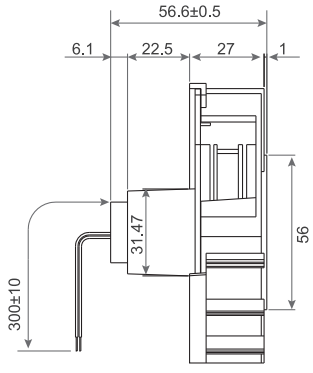

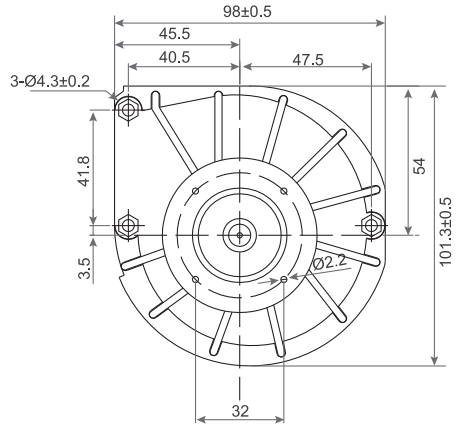

- Frame：Thermoplastic PBT UL94-V0
  外框材質：環保防火PBT
- Impeller：Thermoplastic PBT UL94-V0
  扇葉材質：環保防火PBT
- Bearing：※Sleeve・◎Two Ball bearing
  軸承：※含油・◎滾珠軸承
- Unit Weight：200g
  風扇單體重量：200克

P&Q Curve At Rated Voltage

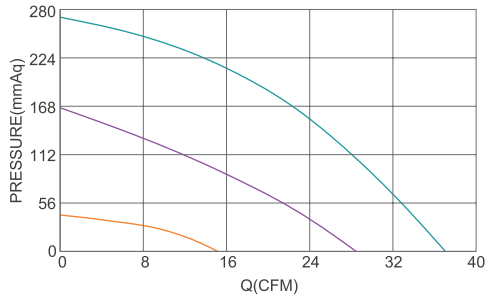

Model No.	Bearing Type	Voltage (VDC)	Current (A)	Power (W)	Speed (RPM)	Air Flow (CFM)	Air Flow (m^3/min)	Air Pressure (mmH_2O)	Air Pressure (Inch H_2O)	Noise (dBA)
TRB9725S05H	※	5 (3.0~6.0)	0.58	2.9	8000	15.18	0.43	42.16	1.66	54.8
TRB9725B24H	◎	24 (18.0~26.5)	0.67	16.1	14100	28.47	0.81	166.33	6.55	68.5
TRB9725B24VH	◎	24 (18.0~26.5)	1.55	37.2	20000	37.05	1.05	271.09	9.58	74.0

X Bearing System ※：Sleeve ★：WRB ◎：Ball

★如果您需要的轉速或電壓或功能不在這份清單上，請與我們業務聯繫 Please contact us, if the SPEC you need is not in the list.

★產品詳細數據及功能請參閱承認書 Please see the approval sheet for more information . ★產品規格變更不另行通知 Specifications are subject to change without notice.

DC Blower Fan

TRB9733 SERIES 97X94X33mm

DIMENSIONS DRAWING UNIT：mm

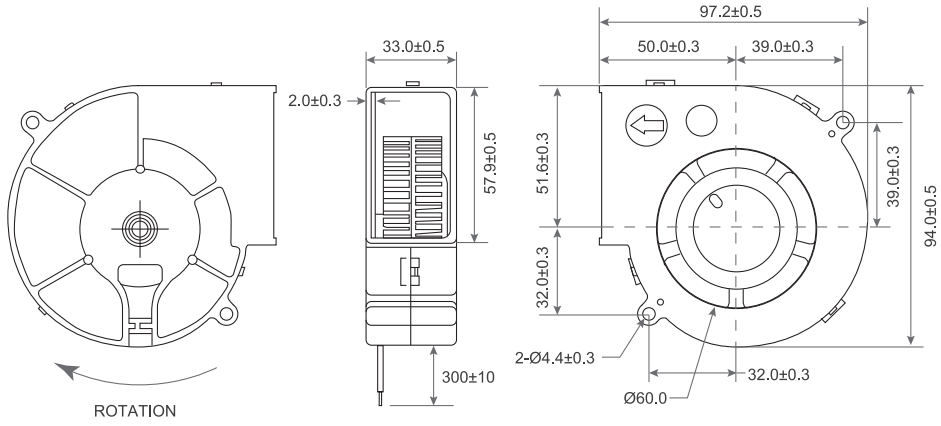

- Frame：Thermoplastic PBT UL94-V0
  外框材質：環保防火PBT
- Impeller：Thermoplastic PBT UL94-V0
  扇葉材質：環保防火PBT
- Bearing：※Sleeve・★WRB・◎Two Ball bearing
  軸承：※含油・★WRB・◎滾珠軸承
- Unit Weight：166g
  風扇單體重量：166克

P&Q Curve At Rated Voltage

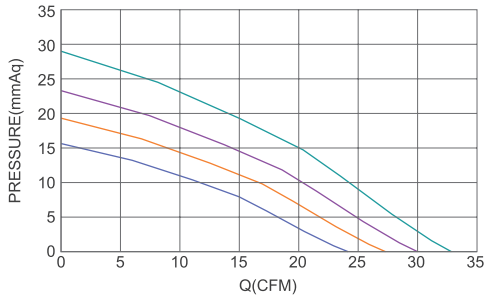

Model No.	Bearing Type	Voltage (VDC)	Current (A)	Power (W)	Speed (RPM)	Air Flow (CFM)	Air Flow (m^3/min)	Air Pressure (mmH_2O)	Air Pressure (Inch H_2O)	Noise (dBA)
TRB9733x12D	※★◎	12 (7.0~14.0)	0.24	2.88	3000	18.19	0.51	8.53	0.34	40.2
TRB9733x12L	※★◎	12 (7.0~14.0)	0.33	3.96	3500	21.22	0.60	11.61	0.46	45.3
TRB9733x12M	※★◎	12 (7.0~14.0)	0.52	6.24	4000	24.25	0.69	15.16	0.60	47.0
TRB9733x12H	※★◎	12 (7.0~14.0)	0.75	9.00	4500	27.28	0.77	19.19	0.76	49.9
TRB9733x12VH	※★◎	12 (7.0~14.0)	0.79	9.48	5000	30.31	0.86	23.69	0.93	53.0
TRB9733x12SH	※★◎	12 (7.0~14.0)	1.06	12.72	5500	33.34	0.94	28.66	1.13	54.5
TRB9733x24D	※★◎	24 (15.0~27.0)	0.12	2.88	3000	18.19	0.51	8.53	0.34	40.2
TRB9733x24L	※★◎	24 (15.0~27.0)	0.15	3.96	3500	21.22	0.60	11.61	0.46	45.3
TRB9733x24M	※★◎	24 (15.0~27.0)	0.24	6.24	4000	24.25	0.69	15.16	0.60	47.0
TRB9733x24H	※★◎	24 (15.0~27.0)	0.30	9.00	4500	27.28	0.77	19.19	0.76	49.9
TRB9733x24VH	※★◎	24 (15.0~27.0)	0.45	9.48	5000	30.31	0.86	23.69	0.93	53.0
TRB9733x24SH	※★◎	24 (15.0~27.0)	0.53	12.72	5500	33.34	0.94	28.66	1.13	54.5
TRB9733x48D	※★◎	48 (35.0~58.0)	0.06	2.88	3000	18.19	0.51	8.53	0.34	40.2
TRB9733x48L	※★◎	48 (35.0~58.0)	0.08	3.96	3500	21.22	0.60	11.61	0.46	45.3
TRB9733x48M	※★◎	48 (35.0~58.0)	0.12	6.24	4000	24.25	0.69	15.16	0.60	47.0
TRB9733x48H	※★◎	48 (35.0~58.0)	0.15	9.00	4500	27.28	0.77	19.19	0.76	49.9
TRB9733x48VH	※★◎	48 (35.0~58.0)	0.23	9.48	5000	30.31	0.86	23.69	0.93	53.0
TRB9733x48SH	※★◎	48 (35.0~58.0)	0.27	12.72	5500	33.34	0.94	28.66	1.13	54.5

(x) Bearing System ※：Sleeve ★：WRB ◎：Ball

★如果您需要的轉速或電壓或功能不在這份清單上，請與我們業務聯繫 Please contact us, if the SPEC you need is not in the list.

★產品詳細數據及功能請參閱承認書 Please see the approval sheet for more information . ★產品規格變更不另行通知 Specifications are subject to change without notice.

DC Blower Fan

TRB9733 U SERIES 97X95X33mm

DIMENSIONS DRAWING UNIT：mm

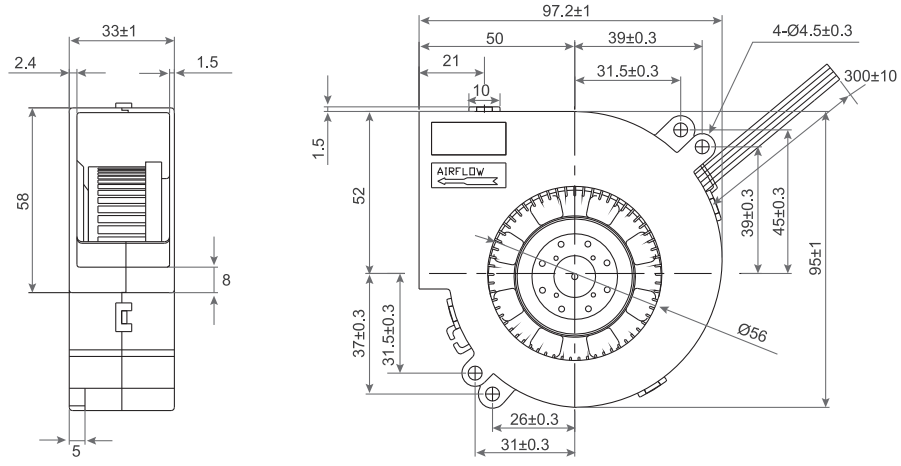

- Frame：Thermoplastic PBT UL94-V0
  外框材質：環保防火PBT
- Impeller：Thermoplastic PBT UL94-V0
  扇葉材質：環保防火PBT
- Bearing：◎Two Ball bearing
  軸承：◎滾珠軸承
- Unit Weight：200g
  風扇單體重量：200克

P&Q Curve At Rated Voltage

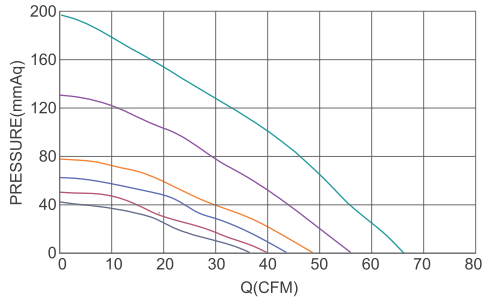

Model No.	Bearing Type	Voltage (VDC)	Current (A)	Power (W)	Speed (RPM)	Air Flow (CFM)	Air Flow (m^3/min)	Air Pressure (mmH_2O)	Air Pressure (Inch H_2O)	Noise (dBA)
TRB9733B12L	◎	12 (7.0~13.8)	0.9	10.8	4500	36.7	1.04	41.79	1.65	56
TRB9733B12M	◎	12 (7.0~13.8)	1.1	13.2	4850	39.2	1.11	49.95	1.97	57
TRB9733B12H	◎	12 (7.0~13.8)	1.4	16.8	5250	43.1	1.22	62.18	2.45	59
TRB9733B12VH	◎	12 (7.0~13.8)	1.8	21.6	5750	47.3	1.34	77.47	3.05	61
TRB9733B12SH	◎	12 (7.0~13.8)	3.4	40.8	6850	56.8	1.61	130.49	5.14	66
TRB9733B12XH	◎	12 (10.8~13.2)	6.2	74.4	8200	65.3	1.85	198.77	7.83	69
TRB9733B24L	◎	24 (21.8~26.4)	0.5	10.8	4500	36.7	1.04	41.79	1.65	56
TRB9733B24M	◎	24 (21.8~26.4)	0.6	13.2	4850	39.2	1.11	49.95	1.97	57
TRB9733B24H	◎	24 (21.8~26.4)	0.7	16.8	5250	43.1	1.22	62.18	2.45	59
TRB9733B24VH	◎	24 (21.8~26.4)	0.8	19.9	5750	47.3	1.34	77.47	3.05	61
TRB9733B24SH	◎	24 (21.8~26.4)	1.6	38.9	6850	56.8	1.61	130.49	5.14	66
TRB9733B24XH	◎	24 (21.6~26.4)	3.1	74.4	8200	65.3	1.85	198.77	7.83	69

X Bearing System ※：Sleeve ★：WRB ◎：Ball

★如果您需要的轉速或電壓或功能不在這份清單上，請與我們業務聯繫 Please contact us, if the SPEC you need is not in the list.

★產品詳細數據及功能請參閱承認書 Please see the approval sheet for more information . ★產品規格變更不另行通知 Specifications are subject to change without notice.

DC Blower Fan

TRB10125 G SERIES 101X107X25mm

- Material：Thermoplastic PBT UL94-V0
  材質：環保防火PBT
- Bearing： ※Sleeve ・★WRB ・◎Two Ball
  軸承：※含油・★WRB・◎滾珠軸承
- Unit Weight：136g
  風扇單體重量：136克

P&Q Curve At Rated Voltage

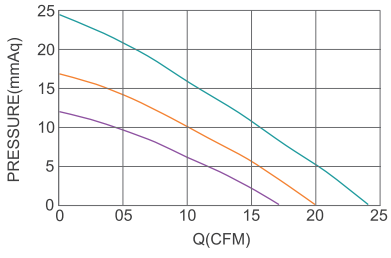

DIMENSIONS DRAWING UNIT：mm

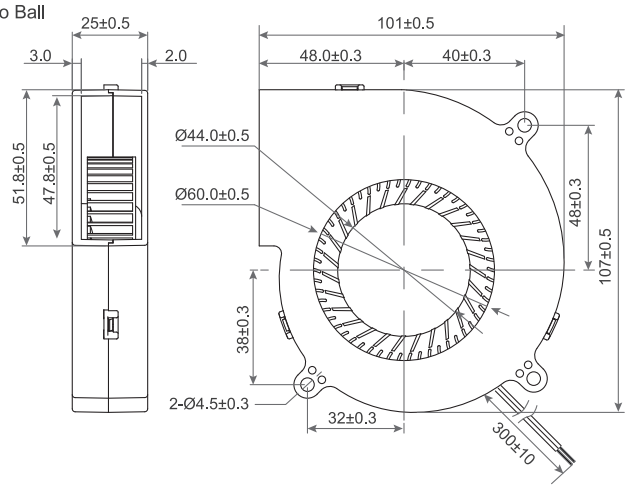

Model No.	Bearing Type	Voltage (VDC)	Current (A)	Power (W)	Speed (RPM)	Air Flow (CFM)	Air Flow (m^3/min)	Air Pressure (mmH_2O)	Air Pressure (Inch H_2O)	Noise (dBA)
TRB10125x12L	※★◎	12 (6.0~13.8)	0.40	4.80	2400	17.15	0.49	12.09	0.47	44.8
TRB10125x12M	※★◎	12 (6.0~13.8)	0.60	6.00	2800	19.95	0.56	16.87	0.66	46.0
TRB10125x12H	※★◎	12 (6.0~13.8)	0.65	7.80	3300	24.11	0.68	24.50	0.95	50.0

DC Blower Fan

TRB1225 U SERIES 120X120X25mm

- Material：Thermoplastic PBT UL94-V0
  材質：環保防火PBT
- Bearing： ※Sleeve ・★WRB ・◎Two Ball
  軸承：※含油・★WRB・◎滾珠軸承
- Unit Weight：128g
  風扇單體重量：128克

P&Q Curve At Rated Voltage

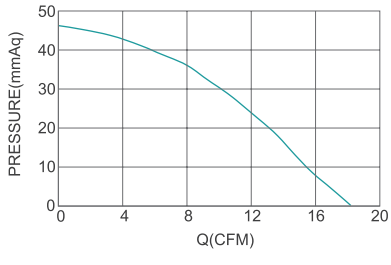

DIMENSIONS DRAWING UNIT：mm

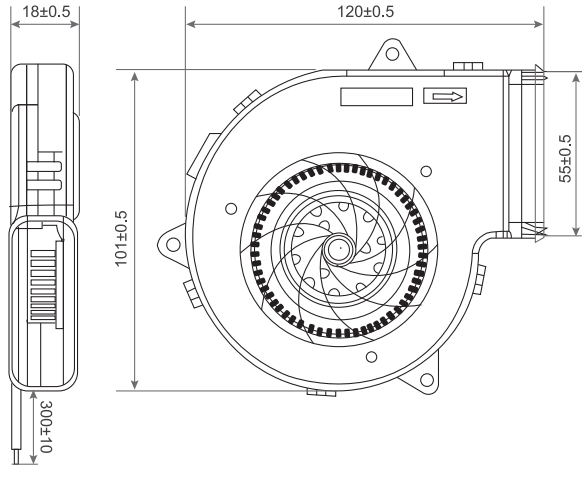

Model No.	Bearing Type	Voltage (VDC)	Current (A)	Power (W)	Speed (RPM)	Air Flow (CFM)	Air Flow (m^3/min)	Air Pressure (mmH_2O)	Air Pressure (Inch H_2O)	Noise (dBA)
TRB1225x05H	※◎★	5 (3.0~6.0)	1.80	9.0	4300	18.2	0.515	48.6	1.91	49.7
TRB1225x12H	※◎★	12 (7.0~13.5)	0.75	9.0	4300	18.2	0.515	48.6	1.91	49.7
TRB1225x24H	※◎★	24 (18.0~26.5)	0.38	9.0	4300	18.2	0.515	48.6	1.91	49.7

X Bearing System ※：Sleeve ★：WRB ◎：Ball

★如果您需要的轉速或電壓或功能不在這份清單上，請與我們業務聯繫 Please contact us, if the SPEC you need is not in the list.

★產品詳細數據及功能請參閱承認書 Please see the approval sheet for more information . ★產品規格變更不另行通知 Specifications are subject to change without notice.

DC Blower Fan

TRB1232 SERIES 120X120X32mm

DIMENSIONS DRAWING UNIT：mm

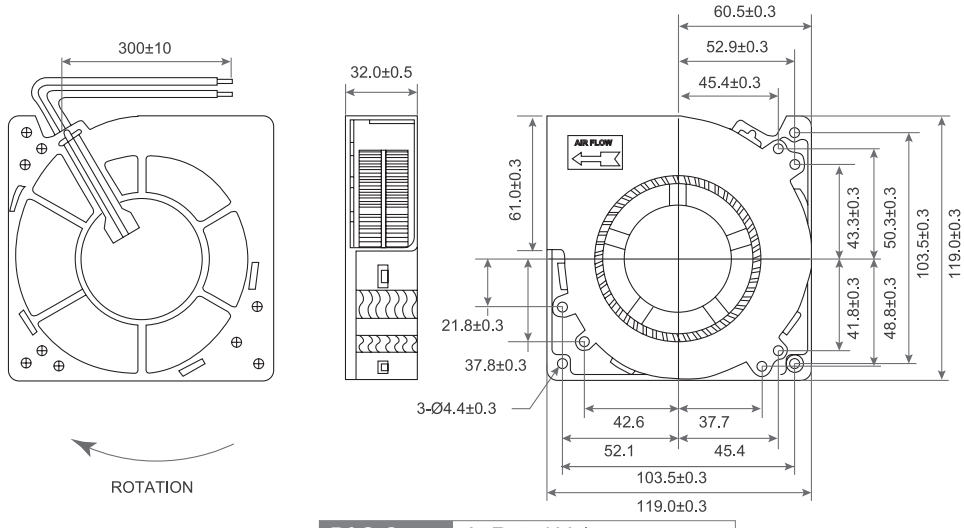

- ●Frame：Thermoplastic PBT UL94-V0
  外框材質：環保防火PBT
- ●Impeller：Thermoplastic PBT UL94-V0
  扇葉材質：環保防火PBT
- ●Bearing：※Sleeve・★WRB・◎Two Ball bearing
  軸承：※含油・★WRB・◎滾珠軸承
- ●Unit Weight：260g
  風扇單體重量：260克

P&Q Curve At Rated Voltage

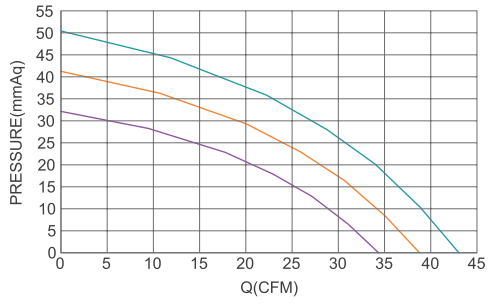

Model No.	Bearing Type	Voltage (VDC)	Current (A)	Power (W)	Speed (RPM)	Air Flow (CFM)	Air Flow (m^3/min)	Air Pressure (mmH2O)	Air Pressure (Inch H2O)	Noise (dBA)
TRB1232x12D	※★◎	12 (7.0~14.0)	0.24	2.88	2000	20.76	0.59	11.21	0.44	40.8
TRB1232x12L	※★◎	12 (7.0~14.0)	0.39	4.68	2400	25.84	0.73	18.12	0.71	45.5
TRB1232x12M	※★◎	12 (7.0~14.0)	0.60	7.20	2800	30.15	0.85	24.67	0.97	48.5
TRB1232x12H	※★◎	12 (7.0~14.0)	1.25	15.00	3200	34.46	0.97	32.22	1.27	51.4
TRB1232x12VH	※★◎	12 (7.0~14.0)	1.85	22.20	3600	38.77	1.10	40.78	1.61	54.3
TRB1232x12SH	※★◎	12 (7.0~14.0)	2.24	26.88	4000	43.07	1.22	50.34	1.98	59.0
TRB1232x24D	※★◎	24 (15.0~27.0)	0.12	2.88	2000	20.76	0.59	11.21	0.44	40.8
TRB1232x24L	※★◎	24 (15.0~27.0)	0.20	4.68	2400	25.84	0.73	18.12	0.71	45.5
TRB1232x24M	※★◎	24 (15.0~27.0)	0.30	7.20	2800	30.15	0.85	24.67	0.97	48.5
TRB1232x24H	※★◎	24 (15.0~27.0)	0.63	15.00	3200	34.46	0.97	32.22	1.27	51.4
TRB1232x24VH	※★◎	24 (15.0~27.0)	0.93	22.20	3600	38.77	1.10	40.78	1.61	54.3
TRB1232x24SH	※★◎	24 (15.0~27.0)	1.12	26.88	4000	43.07	1.22	50.34	1.98	59.0
TRB1232x48L	※★◎	48 (35.0~58.0)	0.10	4.68	2400	25.84	0.73	18.12	0.71	45.5
TRB1232x48M	※★◎	48 (35.0~58.0)	0.15	7.20	2800	30.15	0.85	24.67	0.97	48.5
TRB1232x48H	※★◎	48 (35.0~58.0)	0.32	15.00	3200	34.46	0.97	32.22	1.27	51.4
TRB1232x48VH	※★◎	48 (35.0~58.0)	0.47	22.20	3600	38.77	1.10	40.78	1.61	54.3
TRB1232x48SH	※★◎	48 (35.0~58.0)	0.56	26.88	4000	43.07	1.22	50.34	1.98	59.0

(x) Bearing System ※：Sleeve ★：WRB ◎：Ball

★如果您需要的轉速或電壓或功能不在這份清單上，請與我們業務聯繫 Please contact us, if the SPEC you need is not in the list.

★產品詳細數據及功能請參閱承認書 Please see the approval sheet for more information . ★產品規格變更不另行通知 Specifications are subject to change without notice.

DC Blower Fan

TRB1232 U SERIES 120x120x32mm

DIMENSIONS DRAWING UNIT：mm

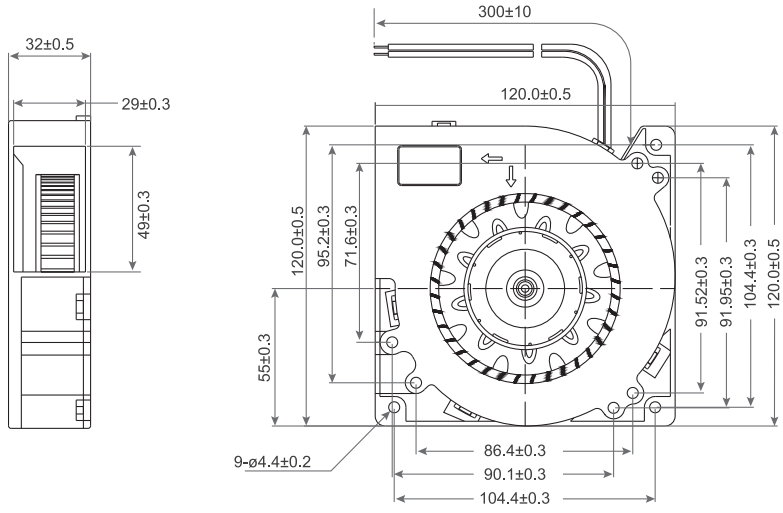

P&Q Curve At Rated Voltage

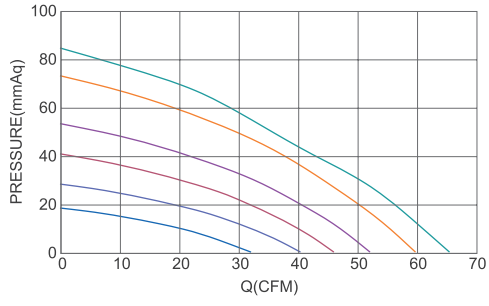

- Frame：Thermoplastic PBT UL94-V0
  外框材質：環保防火PBT
- Impeller：Thermoplastic PBT UL94-V0
  扇葉材質：環保防火PBT
- Bearing：※Sleeve・★WRB・◎Two Ball bearing
  軸承：※含油・★WRB・◎滾珠軸承
- Unit Weight：284g
  風扇單體重量：284克

Model No.	Bearing Type	Voltage (VDC)	Current (A)	Power (W)	Speed (RPM)	Air Flow (CFM)	Air Flow (m^3/min)	Air Pressure (mmH₂O)	Air Pressure (Inch H₂O)	Noise (dBA)
TRB1232x12D	※★◎	12 (7.5~13.5)	0.80	9.6	2500	32.35	1.15	18.98	0.75	50.4
TRB1232x12L	※★◎	12 (7.5~13.5)	1.40	16.8	3000	40.35	1.43	29.28	1.54	52.3
TRB1232x12M	※★◎	12 (7.5~13.5)	1.80	21.6	3500	46.38	1.64	40.17	1.58	58.3
TRB1232x12H	※★◎	12 (7.5~13.5)	2.40	28.8	4000	52.44	1.86	54.63	2.15	59.0
TRB1232x12VH	※★◎	12 (7.5~13.5)	3.00	36.0	4500	59.32	2.10	73.11	2.88	62.2
TRB1232x12SH	※★◎	12 (7.5~13.5)	3.60	43.2	5000	65.96	2.33	83.60	3.29	64.7
TRB1232x24D	※★◎	24 (18.0~26.5)	0.40	9.6	2500	32.35	1.15	18.98	0.75	50.4
TRB1232x24L	※★◎	24 (18.0~26.5)	0.70	16.8	3000	40.35	1.43	29.28	1.54	52.3
TRB1232x24M	※★◎	24 (18.0~26.5)	0.90	21.6	3500	46.38	1.64	40.17	1.58	58.3
TRB1232x24H	※★◎	24 (18.0~26.5)	1.20	28.8	4000	52.44	1.86	54.63	2.15	59.0
TRB1232x24VH	※★◎	24 (18.0~26.5)	1.50	36.0	4500	59.32	2.10	73.11	2.88	62.2
TRB1232x24SH	※★◎	24 (18.0~26.5)	1.80	43.2	5000	65.96	2.33	83.60	3.29	64.7
TRB1232x48D	※★◎	48 (36.0~54.0)	0.20	9.6	2500	32.35	1.15	18.98	0.75	50.4
TRB1232x48L	※★◎	48 (36.0~54.0)	0.35	16.8	3000	40.35	1.43	29.28	1.54	52.3
TRB1232x48M	※★◎	48 (36.0~54.0)	0.45	21.6	3500	46.38	1.64	40.17	1.58	58.3
TRB1232x48H	※★◎	48 (36.0~54.0)	0.60	28.8	4000	52.44	1.86	54.63	2.15	59.0
TRB1232x48VH	※★◎	48 (36.0~54.0)	0.75	36.0	4500	59.32	2.10	73.11	2.88	62.2
TRB1232x48SH	※★◎	48 (36.0~54.0)	0.90	43.2	5000	65.96	2.33	83.60	3.29	64.7

X Bearing System ※：Sleeve ★：WRB ◎：Ball

★如果您需要的轉速或電壓或功能不在這份清單上，請與我們業務聯繫 Please contact us, if the SPEC you need is not in the list.

★產品詳細數據及功能請參閱承認書 Please see the approval sheet for more information . ★產品規格變更不另行通知 Specifications are subject to change without notice.

DC Blower Fan

TRB1232 UB SERIES 127X127x26mm

DIMENSIONS DRAWING UNIT：mm

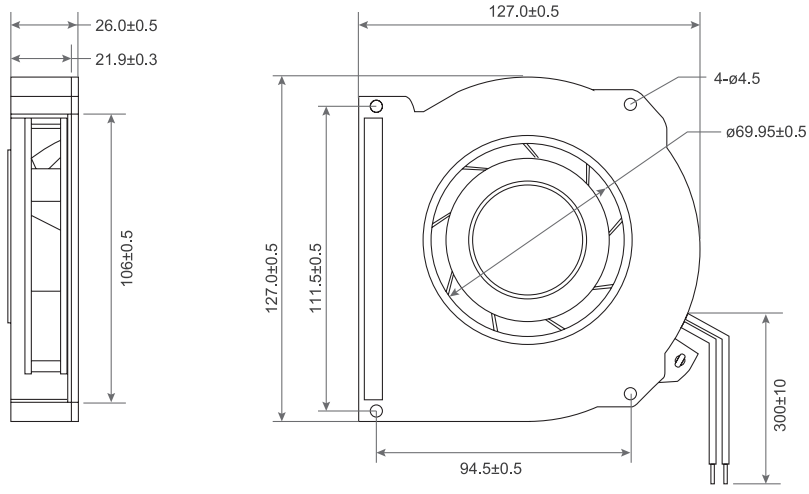

- ●Frame：Thermoplastic PBT UL94-V0
  外框材質：環保防火PBT
- ●Impeller：Thermoplastic PBT UL94-V0
  扇葉材質：環保防火PBT
- ●Bearing：◎Two Ball bearing
  軸承：◎滾珠軸承
- ●Unit Weight：294g
  風扇單體重量：294克

P&Q Curve At Rated Voltage

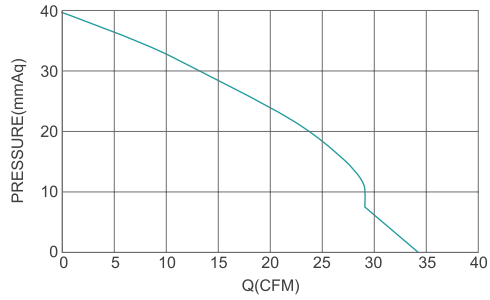

Model No.	Bearing Type	Voltage (VDC)	Current (A)	Power (W)	Speed (RPM)	Air Flow (CFM)	Air Flow (m^3/min)	Air Pressure (mmH2O)	Air Pressure (Inch H2O)	Noise (dBA)
TRB1232x12VH	◎	12 (7.5~13.5)	0.60	7.2	4800	34.8	0.96	39.8	1.5	62.5
TRB1232x24VH	◎	24 (18.0~26.5)	0.30	7.2	4800	34.8	0.96	39.8	1.5	62.5
TRB1232x48VH	◎	48 (36.0~54.0)	0.15	7.2	4800	34.8	0.96	39.8	1.5	62.5

X Bearing System ※：Sleeve ★：WRB ◎：Ball

★如果您需要的轉速或電壓或功能不在這份清單上，請與我們業務聯繫 Please contact us, if the SPEC you need is not in the list.

★產品詳細數據及功能請參閱承認書 Please see the approval sheet for more information . ★產品規格變更不另行通知 Specifications are subject to change without notice.

DC Blower Fan

TRB13840 U SERIES 136X145X40mm

DIMENSIONS DRAWING UNIT：mm

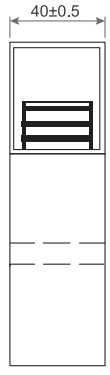

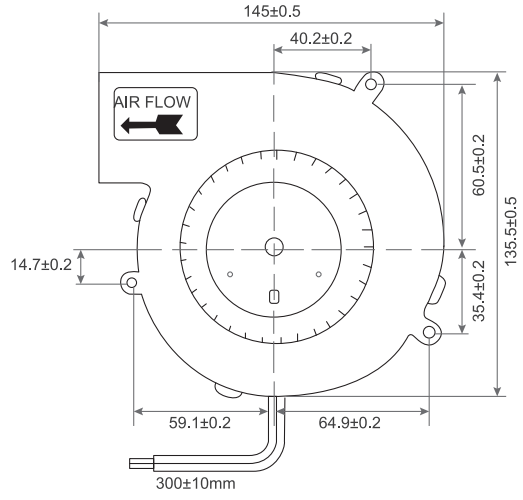

- Frame：Thermoplastic PBT UL94-V0
  外框材質：環保防火PBT
- Impeller：Thermoplastic PBT UL94-V0
  扇葉材質：環保防火PBT
- Bearing：※Sleeve・★WRB・◎Two Ball bearing
  軸承：※含油・★WRB・◎滾珠軸承
- Unit Weight：353g
  風扇單體重量：353克

P&Q Curve At Rated Voltage

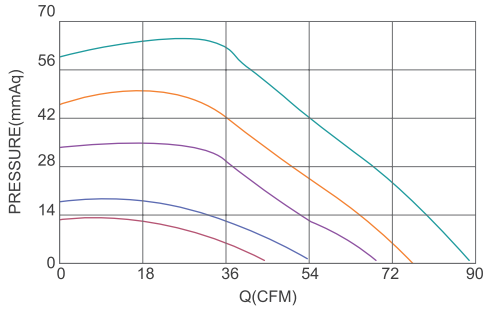

Model No.	Bearing Type	Voltage (VDC)	Current (A)	Power (W)	Speed (RPM)	Air Flow (CFM)	Air Flow (m^3/min)	Air Pressure (mmH₂O)	Air Pressure (Inch H₂O)	Noise (dBA)
TRB13840x12D	※★◎	12 (7.0~14.0)	0.50	6.00	2000	37.30	1.06	8.20	0.32	56.0
TRB13840x12L	※★◎	12 (7.0~14.0)	1.40	16.80	2500	45.70	1.30	12.19	0.48	64.2
TRB13840x12M	※★◎	12 (7.0~14.0)	2.30	27.60	3000	54.70	1.55	17.74	0.70	65.7
TRB13840x12H	※★◎	12 (7.0~14.0)	3.20	38.40	3500	68.00	1.92	33.75	1.33	68.9
TRB13840x12VH	※★◎	12 (7.0~14.0)	4.20	50.40	4000	76.40	2.16	45.48	1.79	70.0
TRB13840x12SH	※★◎	12 (7.0~14.0)	5.10	61.20	4500	87.90	2.49	59.15	2.33	71.9
TRB13840x24D	※★◎	24 (18.0~27.0)	0.25	6.00	2000	37.30	1.06	8.20	0.32	56.0
TRB13840x24L	※★◎	24 (18.0~27.0)	0.70	16.80	2500	45.70	1.30	12.19	0.48	64.2
TRB13840x24M	※★◎	24 (18.0~27.0)	1.15	27.60	3000	54.70	1.55	17.74	0.70	65.7
TRB13840x24H	※★◎	24 (18.0~27.0)	1.60	38.40	3500	68.00	1.92	33.75	1.33	68.9
TRB13840x24VH	※★◎	24 (18.0~27.0)	2.10	50.40	4000	76.40	2.16	45.48	1.79	70.0
TRB13840x24SH	※★◎	24 (18.0~27.0)	2.55	61.20	4500	87.90	2.49	59.15	2.33	71.9
TRB13840x48D	※★◎	48 (36.0~54.0)	0.13	6.00	2000	37.30	1.06	8.20	0.32	56.0
TRB13840x48L	※★◎	48 (36.0~54.0)	0.35	16.80	2500	45.70	1.30	12.19	0.48	64.2
TRB13840x48M	※★◎	48 (36.0~54.0)	0.58	27.60	3000	54.70	1.55	17.74	0.70	65.7
TRB13840x48H	※★◎	48 (36.0~54.0)	0.80	38.40	3500	68.00	1.92	33.75	1.33	68.9
TRB13840x48VH	※★◎	48 (36.0~54.0)	1.05	50.40	4000	76.40	2.16	45.48	1.79	70.0
TRB13840x48SH	※★◎	48 (36.0~54.0)	1.28	61.20	4500	87.90	2.49	59.15	2.33	71.9

(x) Bearing System ※：Sleeve ★：WRB ◎：Ball

★如果您需要的轉速或電壓或功能不在這份清單上，請與我們業務聯繫 Please contact us, if the SPEC you need is not in the list.

★產品詳細數據及功能請參閱承認書 Please see the approval sheet for more information . ★產品規格變更不另行通知 Specifications are subject to change without notice.

DC Blower Fan

TRB16040 U SERIES 160X160X40mm

DIMENSIONS DRAWING UNIT：mm

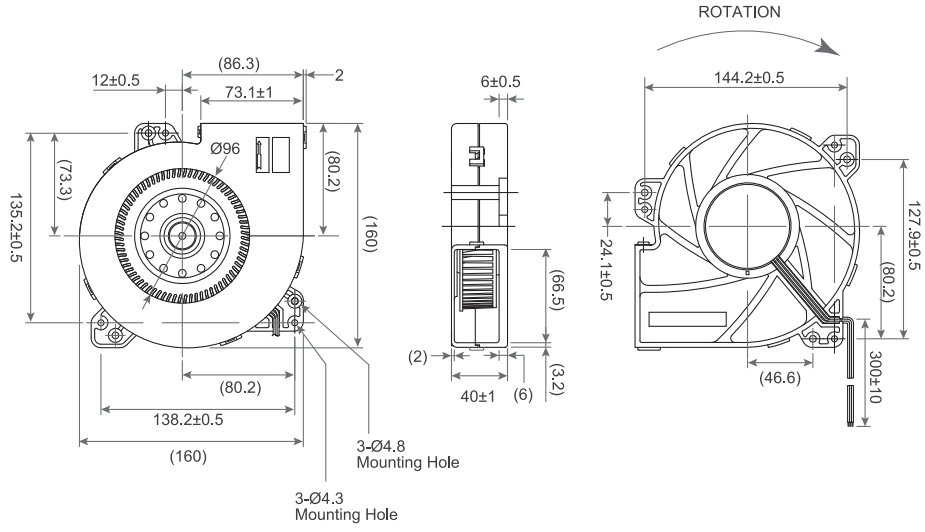

- Frame：Thermoplastic PBT UL94-V0
  外框材質：環保防火PBT
- Impeller：Thermoplastic PBT UL94-V0
  扇葉材質：環保防火PBT
- Bearing：※Sleeve・★WRB・◎Two Ball bearing
  軸承：※含油・★WRB・◎滾珠軸承
- Unit Weight：580g
  風扇單體重量：580克

P&Q Curve At Rated Voltage

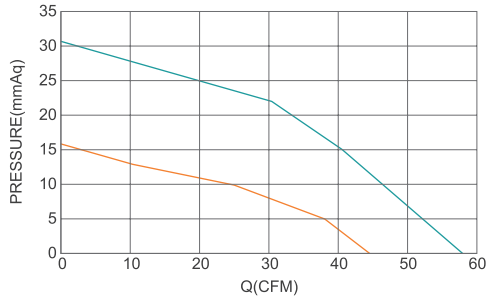

Model No.	Bearing Type	Voltage (VDC)	Current (A)	Power (W)	Speed (RPM)	Air Flow (CFM)	Air Flow (m^3/min)	Air Pressure (mmH2O)	Air Pressure (Inch H2O)	Noise (dBA)
TRB16040x12M	※★◎	12 (7.0~13.5)	0.64	7.68	1800	44.5	1.26	15.98	0.63	50.0
TRB16040x12H	※★◎	12 (7.0~13.5)	1.30	15.60	2300	57.2	1.62	31.98	1.26	55.0
TRB16040x24M	※★◎	24 (18.0~26.5)	0.32	7.68	1800	44.5	1.26	15.98	0.63	50.0
TRB16040x24H	※★◎	24 (18.0~26.5)	0.65	15.60	2300	57.2	1.62	31.98	1.26	55.0
TRB16040x48M	※★◎	48 (36.0~54.0)	0.16	7.68	1800	44.5	1.26	15.98	0.63	50.0
TRB16040x48H	※★◎	48 (36.0~54.0)	0.33	15.60	2300	57.2	1.62	31.98	1.26	55.0

X Bearing System ※：Sleeve ★：WRB ◎：Ball

★如果您需要的轉速或電壓或功能不在這份清單上，請與我們業務聯繫 Please contact us, if the SPEC you need is not in the list.

★產品詳細數據及功能請參閱承認書 Please see the approval sheet for more information . ★產品規格變更不另行通知 Specifications are subject to change without notice.

DC Blower Fan

TRB12072 AF SERIES 188X198.5X115mm

- Material：Galvanished sheet steel
  材質：鍍鋅板材
- Bearing System：Two Ball Bearing
  軸承結構：滾珠軸承
- Unit Weight：3100g
  風扇單體重量：3100克

P&Q Curve | At Rated Voltage

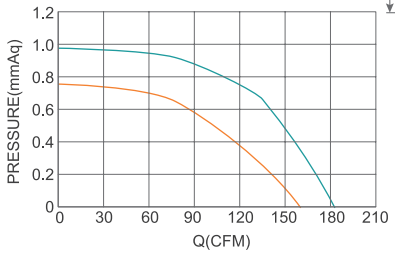

DIMENSIONS DRAWING | UNIT：mm

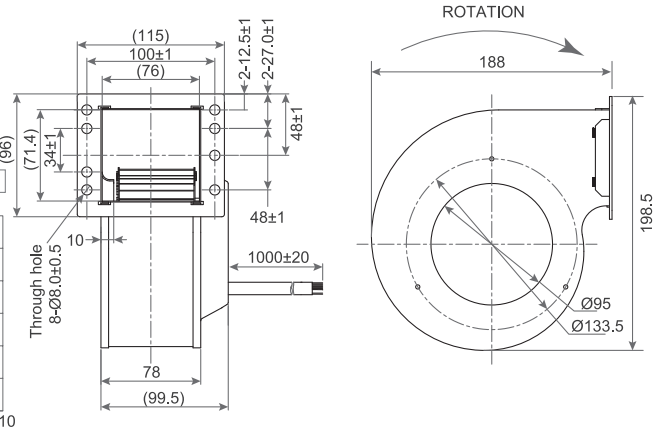

Model No.	Bearing Type	Voltage (VDC)	Current (A)	Power (W)	Speed (RPM)	Air Flow (CFM)	Air Flow (m^3/min)	Air Pressure (mmH_2O)	Air Pressure (Inch H_2O)	Noise (dBA)
TRB12072B3H	◎	310	0.21	65.0	2200	182.0	5.15	24.89	0.98	57.0

DC Blower Fan

TRB13372 AF SERIES 175X199.6X116mm

- Material：Galvanished sheet steel
  材質：鍍鋅板材
- Bearing System：Two Ball Bearing
  軸承結構：滾珠軸承
- Unit Weight：3100g
  風扇單體重量：3100克

P&Q Curve | At Rated Voltage

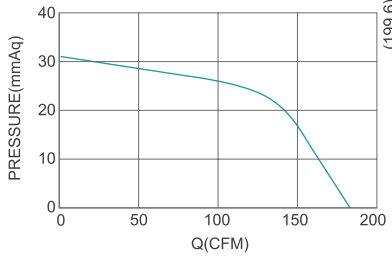

DIMENSIONS DRAWING | UNIT：mm

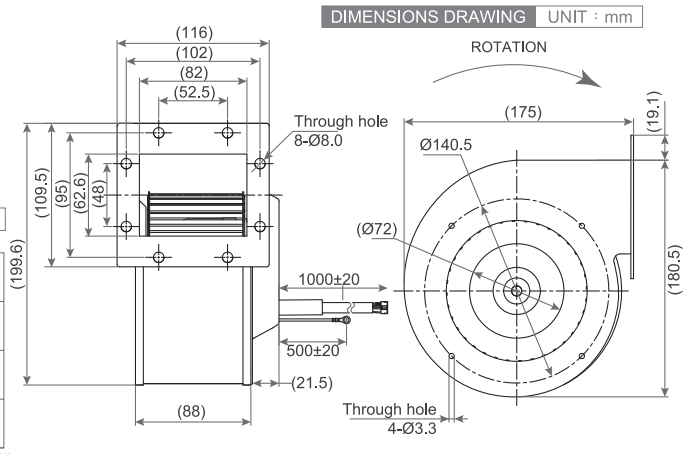

Model No.	Bearing Type	Voltage (VDC)	Current (A)	Power (W)	Speed (RPM)	Air Flow (CFM)	Air Flow (m^3/min)	Air Pressure (mmH_2O)	Air Pressure (Inch H_2O)	Noise (dBA)
TRB13372B3H	◎	310	0.21	65.0	2100	182.0	5.15	32.01	1.26	59.0

Ⓧ Bearing System ※：Sleeve ★：WRB ◎：Ball

★如果您需要的轉速或電壓或功能不在這份清單上，請與我們業務聯繫 Please contact us, if the SPEC you need is not in the list.

★產品詳細數據及功能請參閱承認書 Please see the approval sheet for more information . ★產品規格變更不另行通知 Specifications are subject to change without notice.

DC Blower Fan

TRB14072 AF SERIES 220X260.2X135mm

- Material：Galvanished sheet steel
  材質：鍍鋅板材
- Bearing System：Two Ball Bearing
  軸承結構：滾珠軸承
- Unit Weight：3100g
  風扇單體重量：3100克

P&Q Curve | At Rated Voltage

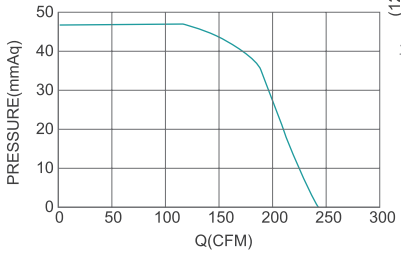

DIMENSIONS DRAWING | UNIT：mm

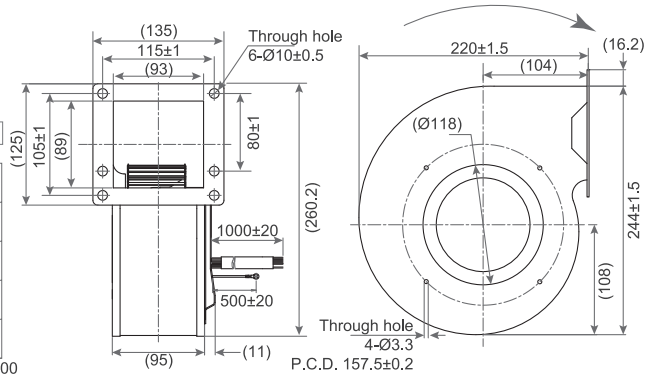

Model No.	Bearing Type	Voltage (VDC)	Current (A)	Power (W)	Speed (RPM)	Air Flow (CFM)	Air Flow (m^3/min)	Air Pressure (mmH₂O)	Air Pressure (Inch H₂O)	Noise (dBA)
TRB14072B3H	◎	310	0.26	80.0	1800	246.96	7.41	47.9	1.88	71.0

DC Blower Fan

TRB16072 AF SERIES 220X260.2X135mm

- Material：Galvanished sheet steel
  材質：鍍鋅板材
- Bearing System：Two Ball Bearing
  軸承結構：滾珠軸承
- Unit Weight：3100g
  風扇單體重量：3100克

P&Q Curve | At Rated Voltage

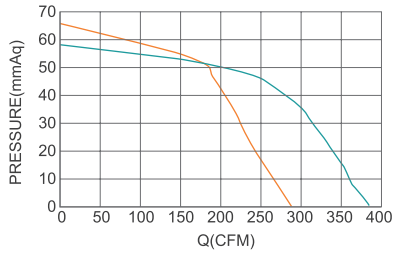

DIMENSIONS DRAWING | UNIT：mm

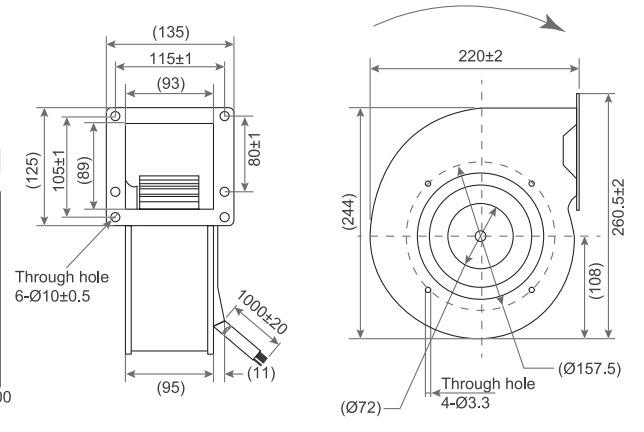

Model No.	Bearing Type	Voltage (VDC)	Current (A)	Power (W)	Speed (RPM)	Air Flow (CFM)	Air Flow (m^3/min)	Air Pressure (mmH₂O)	Air Pressure (Inch H₂O)	Noise (dBA)
TRB16072B3M	◎	310	0.26	80.0	1600	281.0	7.95	66.1	2.6	61.0
TRB16072B3H	◎	310	0.71	220.0	2400	388.0	10.98	58.4	2.3	66.0

Ⓧ Bearing System ※：Sleeve ★：WRB ◎：Ball

★如果您需要的轉速或電壓或功能不在這份清單上，請與我們業務聯繫 Please contact us, if the SPEC you need is not in the list.

★產品詳細數據及功能請參閱承認書 Please see the approval sheet for more information . ★產品規格變更不另行通知 Specifications are subject to change without notice.

DC Blower Fan

TRB18092 AF SERIES 261.5X301.3X169.5mm

- Material：Galvanished sheet steel
  材質：鍍鋅板材
- Bearing System：Two Ball Bearing
  軸承結構：滾珠軸承
- Unit Weight：3100g
  風扇單體重量：3100克

P&Q Curve | At Rated Voltage

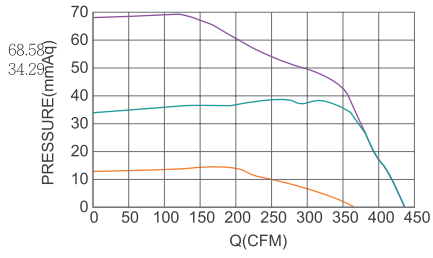

365 435

DIMENSIONS DRAWING | UNIT：mm

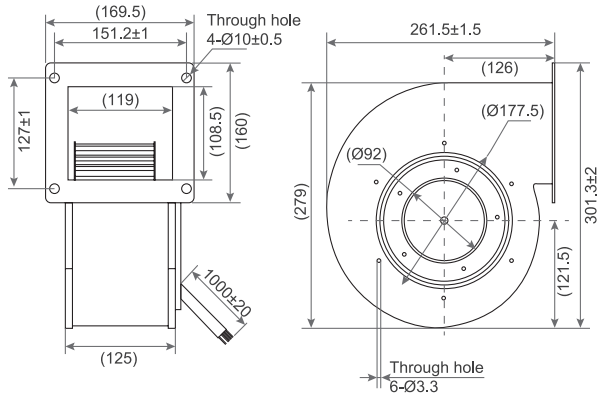

Model No.	Bearing Type	Voltage (VDC)	Current (A)	Power (W)	Speed (RPM)	Air Flow (CFM)	Air Flow (m^3/min)	Air Pressure (mmH_2O)	Air Pressure (Inch H_2O)	Noise (dBA)
TRB18092B3H	◎	310	0.58	180.0	1600	435.0	12.31	68.58	2.70	65.0

Ⓧ Bearing System ※：Sleeve ★：WRB ◎：Ball

★如果您需要的轉速或電壓或功能不在這份清單上，請與我們業務聯繫 Please contact us, if the SPEC you need is not in the list.

★產品詳細數據及功能請參閱承認書 Please see the approval sheet for more information . ★產品規格變更不另行通知 Specifications are subject to change without notice.

DC CENTRIFUGAL FAN

DC Centrifugal Fan

TRC7020 U SERIES Ø70X20mm

- Frame：Thermoplastic PBT UL94-V0
  外框材質：環保防火PBT
- Impeller：Thermoplastic PBT UL94-V0
  扇葉材質：環保防火PBT
- Bearing： ※Sleeve ・★WRB ・◎Two Ball
  軸承：※含油・★WRB・◎滾珠軸承
- Unit Weight：90g
  風扇單體重量：90克

P&Q Curve | At Rated Voltage

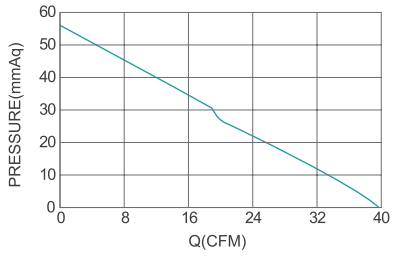

DIMENSIONS DRAWING | UNIT：mm

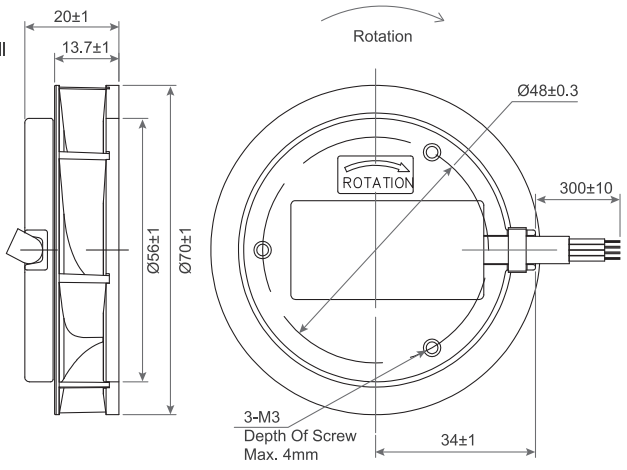

Model No.	Bearing Type	Voltage (VDC)	Current (A)	Power (W)	Speed (RPM)	Air Flow (CFM)	Air Flow (m^3/min)	Air Pressure (mmH_2O)	Air Pressure (Inch H_2O)	Noise (dBA)
TRC7020x12H	※★◎	12 (7.0~14.0)	1.00	12.0	9200	39.9	1.13	56.9	2.24	61.0
TRC7020x24H	※★◎	24 (13.5~26.5)	0.50	12.0	9200	39.9	1.13	56.9	2.24	61.0
TRC7020x48H	※★◎	48 (36.0~54.0)	0.25	12.0	9200	39.9	1.13	56.9	2.24	61.0

DC Centrifugal Fan

TRC9025 U SERIES Ø90X25mm

- Frame：Thermoplastic PBT UL94-V0
  外框材質：環保防火PBT
- Impeller：Thermoplastic PBT UL94-V0
  扇葉材質：環保防火PBT
- Bearing：◎Two Ball bearing
  軸承：◎滾珠軸承
- Unit Weight：85g
  風扇單體重量：85克

P&Q Curve | At Rated Voltage

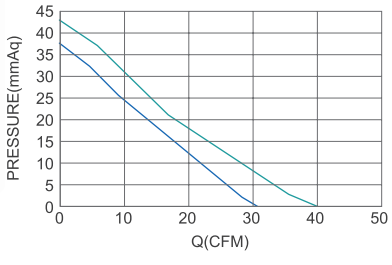

DIMENSIONS DRAWING | UNIT：mm

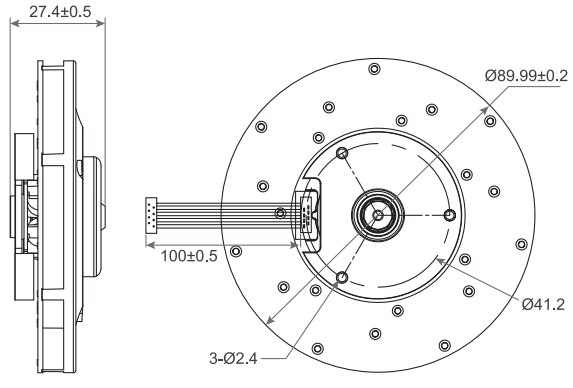

Model No.	Bearing Type	Voltage (VDC)	Current (A)	Power (W)	Speed (RPM)	Air Flow (CFM)	Air Flow (m^3/min)	Air Pressure (mmH_2O)	Air Pressure (Inch H_2O)	Noise (dBA)
TRC9025B12M	◎	12 (7.5~13.5)	1.25	18.0	9300	37.8	1.07	30.9	1.22	71.9
TRC9025B12M	◎	12 (5.0~14.5)	1.25	18.0	9300	37.8	1.07	30.9	1.22	70.9
TRC9025B12H	◎	12 (5.0~11.0)	1.80	19.4	9450	39.2	1.11	42.6	1.68	71.9

X Bearing System ※：Sleeve ★：WRB ◎：Ball

★如果您需要的轉速或電壓或功能不在這份清單上，請與我們業務聯繫 Please contact us, if the SPEC you need is not in the list.

★產品詳細數據及功能請參閱承認書 Please see the approval sheet for more information . ★產品規格變更不另行通知 Specifications are subject to change without notice.

DC Centrifugal Fan

TRC10025 U SERIES Ø120X25mm

DIMENSIONS DRAWING UNIT：mm

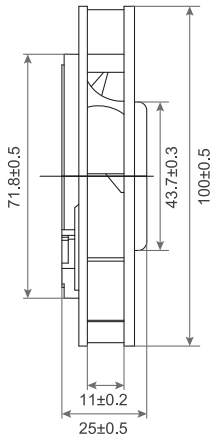

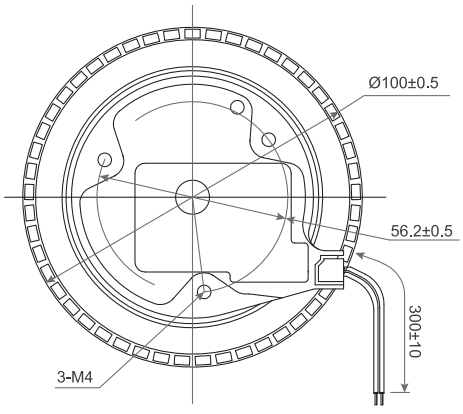

- Frame：Thermoplastic PBT UL94-V0
  外框材質：環保防火PBT
- Impeller：Thermoplastic PBT UL94-V0
  扇葉材質：環保防火PBT
- Bearing ：※Sleeve ・★WRB ・◎Two Ball Bearing
  軸承：※含油・★WRB・◎滾珠軸承
- Unit Weight：121g
  風扇單體重量：121克

P&Q Curve At Rated Voltage

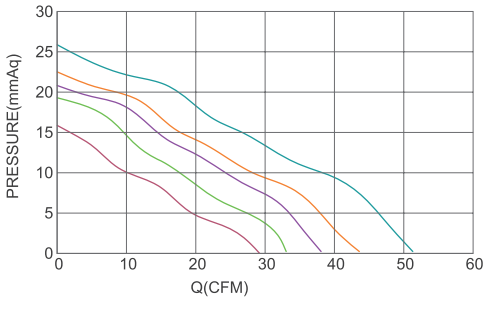

Model No.	Bearing Type	Voltage (VDC)	Current (A)	Power (W)	Speed (RPM)	Air Flow (CFM)	Air Flow (m^3/min)	Air Pressure (mmH2O)	Air Pressure (Inch H2O)	Noise (dBA)
TRC10025x12D	※★◎	12 (3.0~13.5)	0.29	3.5	2500	24.1	0.68	13.16	0.52	31.0
TRC10025x12L	※★◎	12 (3.0~13.5)	0.35	4.2	3000	29.0	0.82	15.79	0.62	37.2
TRC10025x12M	※★◎	12 (3.0~13.5)	0.41	4.9	3500	33.8	0.95	18.42	0.73	43.5
TRC10025x12H	※★◎	12 (3.0~13.5)	0.47	5.6	4000	38.6	1.09	21.06	0.83	49.7
TRC10025x12VH	※★◎	12 (3.0~13.5)	0.53	6.4	4500	43.5	1.22	23.69	0.92	55.9
TRC10025x24D	※★◎	24 (12.0~28.0)	0.15	3.6	2500	24.1	0.68	13.16	0.52	31.0
TRC10025x24L	※★◎	24 (12.0~28.0)	0.18	4.3	3000	29.0	0.82	15.79	0.62	37.2
TRC10025x24M	※★◎	24 (12.0~28.0)	0.21	5.0	3500	33.8	0.95	18.42	0.73	43.5
TRC10025x24H	※★◎	24 (12.0~28.0)	0.24	5.8	4000	38.6	1.09	21.06	0.83	49.7
TRC10025x24VH	※★◎	24 (12.0~28.0)	0.27	6.5	4500	43.5	1.22	23.69	0.92	55.9
TRC10025x24SH	※★◎	24 (12.0~28.0)	0.35	8.4	5500	51.3	1.44	25.50	1.16	62.0

X Bearing System ※：Sleeve ★：WRB ◎：Ball

★如果您需要的轉速或電壓或功能不在這份清單上，請與我們業務聯繫 Please contact us, if the SPEC you need is not in the list.

★產品詳細數據及功能請參閱承認書 Please see the approval sheet for more information . ★產品規格變更不另行通知 Specifications are subject to change without notice.

DC Centrifugal Fan

TRC12025 U SERIES Ø120X25mm

- Frame：Thermoplastic PBT UL94-V0
  外框材質：環保防火PBT
- Impeller：Thermoplastic PBT UL94-V0
  扇葉材質：環保防火PBT
- Bearing：◎Two Ball bearing
  軸承：◎滾珠軸承
- Unit Weight：155g
  風扇單體重量：155克

P&Q Curve | At Rated Voltage

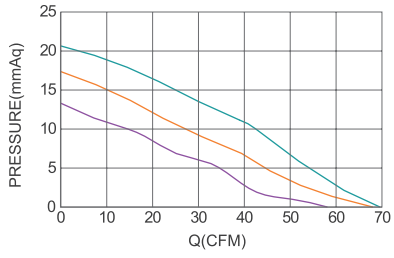

DIMENSIONS DRAWING | UNIT：mm

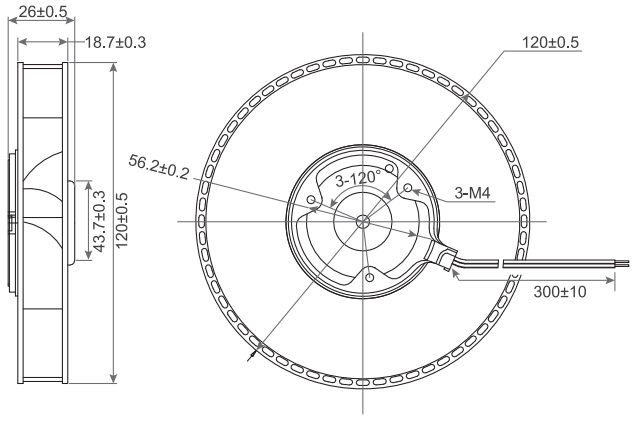

Model No.	Bearing Type	Voltage (VDC)	Current (A)	Power (W)	Speed (RPM)	Air Flow (CFM)	Air Flow (m^3/min)	Air Pressure (mmH₂O)	Air Pressure (Inch H₂O)	Temperature Min / Max(°C)	Noise (dBA)
TRC1225B12L	◎	12	0.60	7.2	2500	57.29	1.62	13.95	0.55	-25°C ~ +60°C	45.0
TRC1225B12M	◎	12	0.80	9.6	3000	17.74	1.93	17.74	0.70	-25°C ~ +60°C	49.6
TRC1225B12H	◎	12	1.20	14.4	3500	21.18	1.97	21.18	0.83	-25°C ~ +60°C	53.5
TRC1225B24L	◎	24	0.30	7.2	2500	57.29	1.62	13.95	0.55	-25°C ~ +60°C	45.0
TRC1225B24M	◎	24	0.40	9.6	3000	17.74	1.93	17.74	0.70	-25°C ~ +60°C	49.6
TRC1225B24H	◎	24	0.60	14.4	3500	21.18	1.97	21.18	0.83	-25°C ~ +60°C	53.5
TRC1225B48L	◎	48	0.15	7.2	2500	57.29	1.62	13.95	0.55	-25°C ~ +60°C	45.0
TRC1225B48M	◎	48	0.20	9.6	3000	17.74	1.93	17.74	0.70	-25°C ~ +60°C	49.6
TRC1225B48H	◎	48	0.32	14.4	3500	21.18	1.97	21.18	0.83	-25°C ~ +60°C	53.5

DC Centrifugal Fan

TRC12054 U SERIES Ø120X54mm

- Frame：Aluminum
  外框材質：鋁框
- Impeller：Thermoplastic PBT UL94-V0
  扇葉材質：環保防火PBT
- Bearing：◎Two Ball bearing
  軸承：◎滾珠軸承
- Unit Weight：315g
  風扇單體重量：315克

P&Q Curve | At Rated Voltage

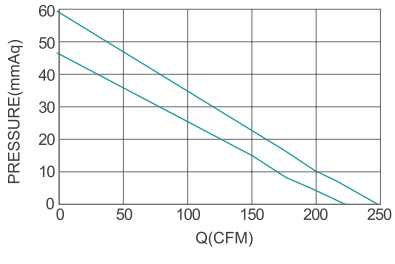

DIMENSIONS DRAWING | UNIT：mm

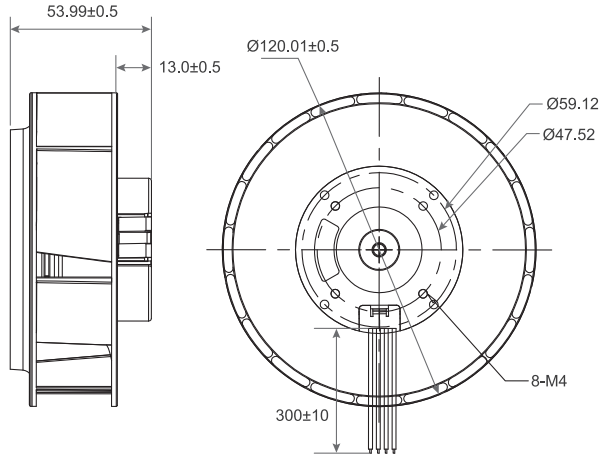

Model No.	Bearing Type	Voltage (VDC)	Current (A)	Power (W)	Speed (RPM)	Air Flow (CFM)	Air Flow (m^3/min)	Air Pressure (mmH₂O)	Air Pressure (Inch H₂O)	Temperature Min / Max(°C)	Noise (dBA)
TRC12054B12M	◎	12	3.2	37.5	5000	206.7	5.85	47.1	1.86	-25°C ~ +60°C	69.0
TRC12054B12H	◎	12	5.6	67.2	6000	230.1	6.51	60.0	2.36	-25°C ~ +60°C	74.9
TRC12054B24M	◎	24	1.6	37.5	5000	206.7	5.85	47.1	1.86	-25°C ~ +60°C	69.0
TRC12054B24H	◎	24	2.8	67.2	6000	230.1	6.51	60.0	2.36	-25°C ~ +60°C	74.9
TRC12054B48M	◎	48	0.8	37.5	5000	206.7	5.85	47.1	1.86	-25°C ~ +60°C	69.0
TRC12054B48H	◎	48	1.4	67.2	6000	230.1	6.51	60.0	2.36	-25°C ~ +60°C	74.9

Ⓧ Bearing System ※：Sleeve ★：WRB ◎：Ball

★如果您需要的轉速或電壓或功能不在這份清單上，請與我們業務聯繫 Please contact us, if the SPEC you need is not in the list.

★產品詳細數據及功能請參閱承認書 Please see the approval sheet for more information . ★產品規格變更不另行通知 Specifications are subject to change without notice.

DC Centrifugal Fan

TRC15035 U SERIES Ø150X35mm

- Frame：Thermoplastic PBT UL94-V0
  外框材質：環保防火PBT
- Impeller：Thermoplastic PBT UL94-V0
  扇葉材質：環保防火PBT
- Bearing：◎Two Ball bearing
  軸承：◎滾珠軸承
- Unit Weight：353g
  風扇單體重量：353克

P&Q Curve | At Rated Voltage

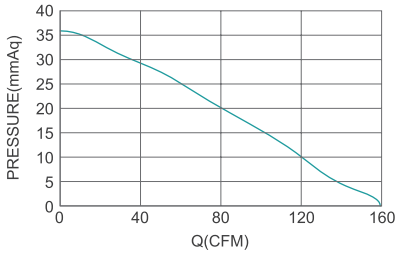

DIMENSIONS DRAWING | UNIT：mm

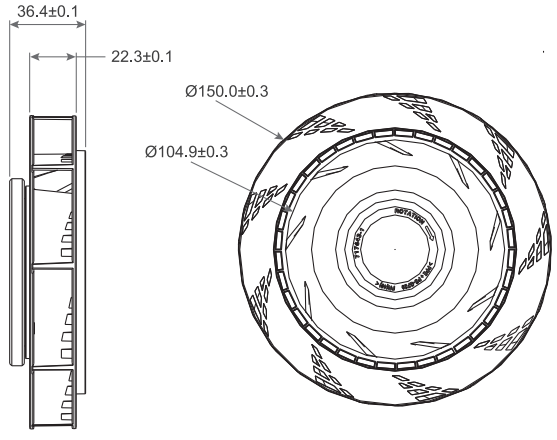

Model No.	Bearing Type	Voltage (VDC)	Current (A)	Power (W)	Speed (RPM)	Air Flow (CFM)	Air Flow (m^3/min)	Air Pressure (mmH₂O)	Air Pressure (Inch H₂O)	Noise (dBA)
TRC15035B24M	◎	24 (18.0~26.5)	0.77	18.48	3700	159.15	4.50	36.56	1.44	64.3
TRC15035B48M	◎	48 (36.0~54.0)	0.39	18.48	3700	159.15	4.50	36.56	1.44	64.3

DC Centrifugal Fan

TRC16045 U SERIES Ø160X46mm

- Frame：Thermoplastic PBT UL94-V0
  外框材質：環保防火PBT
- Impeller：Thermoplastic PBT UL94-V0
  扇葉材質：環保防火PBT
- Bearing：◎Two Ball bearing
  軸承：◎滾珠軸承
- Unit Weight：400g
  風扇單體重量：400克

P&Q Curve | At Rated Voltage

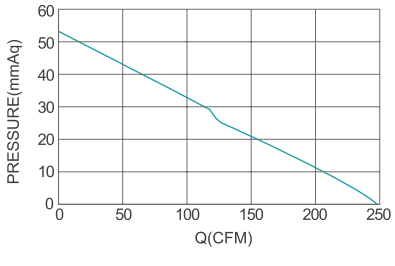

DIMENSIONS DRAWING | UNIT：mm

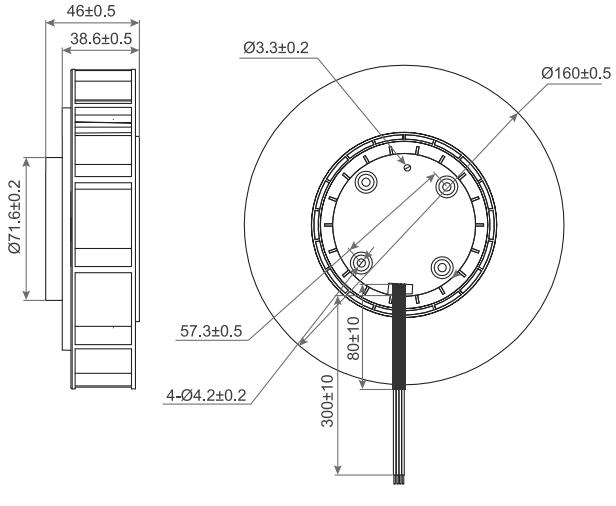

Model No.	Bearing Type	Voltage (VDC)	Current (A)	Power (W)	Speed (RPM)	Air Flow (CFM)	Air Flow (m^3/min)	Air Pressure (mmH₂O)	Air Pressure (Inch H₂O)	Noise (dBA)
TRC16045B24H	◎	24 (18.0~26.5)	1.60	38.4	3500	249.6	7.06	54.94	2.16	57.9

(X) Bearing System ※：Sleeve ★：WRB ◎：Ball

★如果您需要的轉速或電壓或功能不在這份清單上，請與我們業務聯繫 Please contact us, if the SPEC you need is not in the list.

★產品詳細數據及功能請參閱承認書 Please see the approval sheet for more information . ★產品規格變更不另行通知 Specifications are subject to change without notice.

DC Centrifugal Fan

TRC17568 AF SERIES Ø175X68mm

- Frame：Thermoplastic PBT UL94-V0
  外框材質：環保防火PBT
- Impeller：Thermoplastic PBT UL94-V0
  扇葉材質：環保防火PBT
- Bearing：◎Two Ball bearing
  軸承：◎滾珠軸承
- Protection Class：IP42
  防護等級：IP42

P&Q Curve | At Rated Voltage

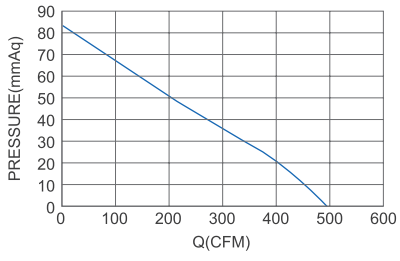

DIMENSIONS DRAWING | UNIT：mm

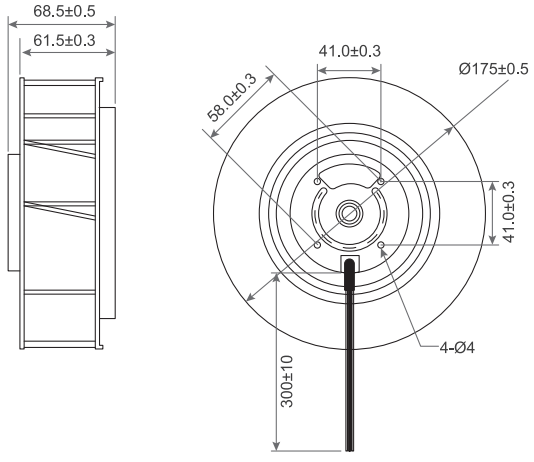

Model No.	Bearing Type	Voltage (VDC)	Current (A)	Power (W)	Speed (RPM)	Air Flow (CFM)	Air Flow (m^3/min)	Air Pressure (mmH2O)	Air Pressure (Inch H2O)	Noise (dBA)
TRC17568B48UH	◎	48 (36.0~50.0)	2.60	124.8	4750	497.04	14.07	83.11	3.73	83.2

DC Centrifugal Fan

TRC17572 AF SERIES Ø175X72mm

- Material：Plastic PA66
  材質：塑料PA66
- Bearing：◎Two Ball bearing
  軸承：◎滾珠軸承
- Protection Class：IP42
  防護等級：IP42

P&Q Curve | At Rated Voltage

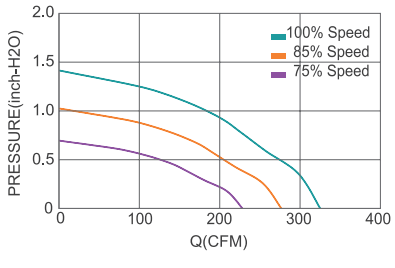

DIMENSIONS DRAWING | UNIT：mm

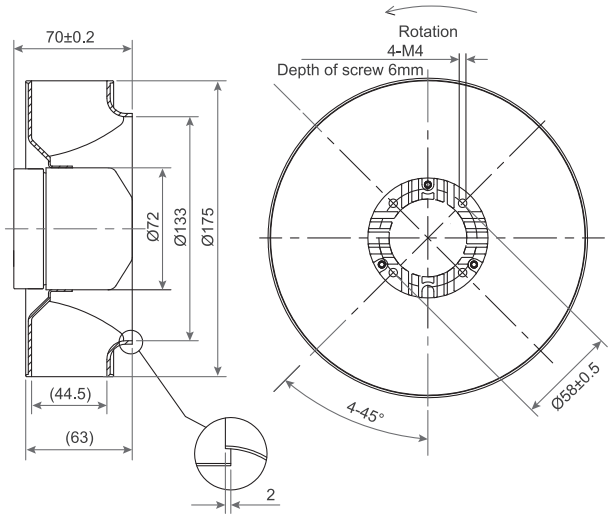

Model No.	Bearing Type	Voltage (VDC)	Current (A)	Power (W)	Speed (RPM)	Air Flow (CFM)	Air Flow (m^3/min)	Air Pressure (mmH2O)	Air Pressure (Inch H2O)	Temperature Min / Max(°C)	Noise (dBA)
TRC17572B24H	◎	24	2.08	50	3100	320	9.06	36.1	1.42	-25°C ~ +60°C	65.0
TRC17572B48H	◎	48	1.04	50	3100	320	9.06	36.1	1.42	-25°C ~ +60°C	65.0

Ⓧ Bearing System ※：Sleeve ★：WRB ◎：Ball

★如果您需要的轉速或電壓或功能不在這份清單上，請與我們業務聯繫 Please contact us, if the SPEC you need is not in the list.

★產品詳細數據及功能請參閱承認書 Please see the approval sheet for more information . ★產品規格變更不另行通知 Specifications are subject to change without notice.

DC Centrifugal Fan

TRC19067 SERIES Ø190X67mm

- Material：Plastic PA66
  材質：塑料PA66
- Bearing：◎Two Ball bearing
  軸承：◎滾珠軸承
- Protection Class：IP42
  防護等級：IP42

P&Q Curve | At Rated Voltage

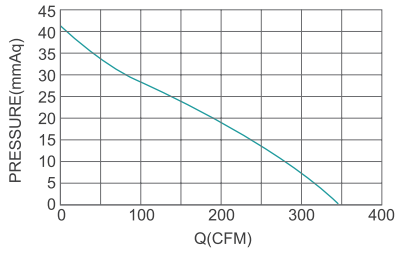

DIMENSIONS DRAWING | UNIT：mm

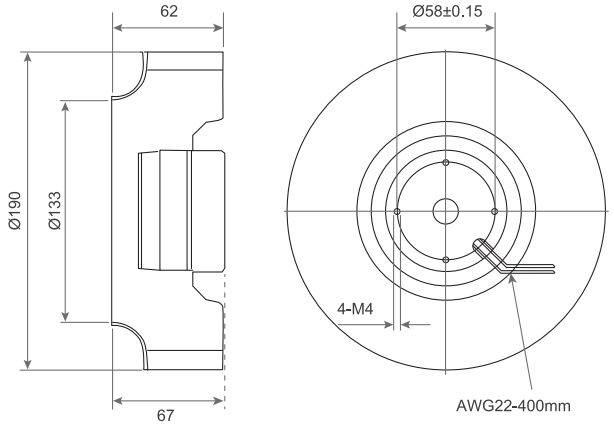

Model No.	Bearing Type	Voltage (VDC)	Current (A)	Power (W)	Speed (RPM)	Air Flow (CFM)	Air Flow (m^3/min)	Air Pressure (mmH2O)	Air Pressure (Inch H2O)	Noise (dBA)
TRC19067B48H	◎	48	1.1	52.8	2800	346	9.79	39.3	1.55	64.0

DC Centrifugal Fan

TRC19072 AF SERIES Ø190X72mm

- Material：Plastic PA66
  材質：塑料PA66
- Bearing：◎Two Ball bearing
  軸承：◎滾珠軸承
- Protection Class：IP42
  防護等級：IP42

P&Q Curve | At Rated Voltage

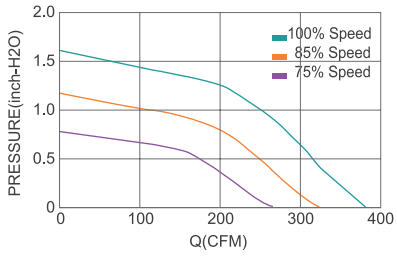

DIMENSIONS DRAWING | UNIT：mm

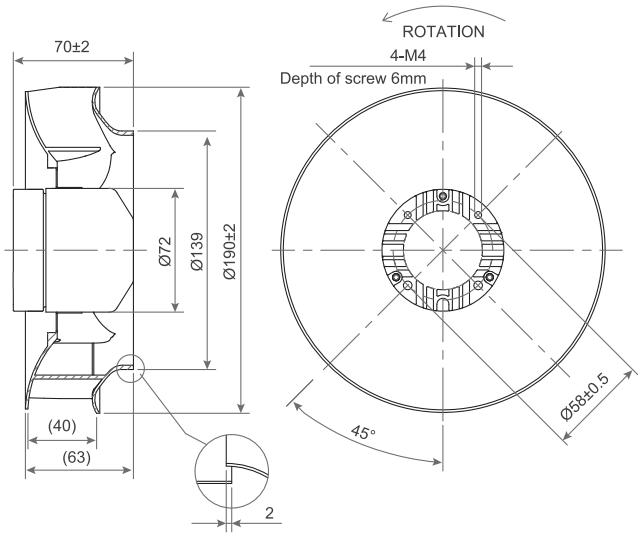

Model No.	Bearing Type	Voltage (VDC)	Current (A)	Power (W)	Speed (RPM)	Air Flow (CFM)	Air Flow (m^3/min)	Air Pressure (mmH2O)	Air Pressure (Inch H2O)	Temperature Min / Max(°C)	Noise (dBA)
TRC19072B24H	◎	24	2.70	65	3100	380	10.75	41.15	1.62	-25°C ~ +60°C	65.0
TRC19072B48H	◎	48	1.35	65	3100	380	10.75	41.15	1.62	-25°C ~ +60°C	65.0

Bearing System ※：Sleeve ★：WRB ◎：Ball

★如果您需要的轉速或電壓或功能不在這份清單上，請與我們業務聯繫 Please contact us, if the SPEC you need is not in the list.

★產品詳細數據及功能請參閱承認書 Please see the approval sheet for more information . ★產品規格變更不另行通知 Specifications are subject to change without notice.

DC Centrifugal Fan

TRC225101 SERIES Ø225X101mm

- Material：Plastic PA66
  材質：塑料PA66
- Bearing：◎Two Ball bearing
  軸承：◎滾珠軸承
- Protection Class：IP42
  防護等級：IP42

P&Q Curve At Rated Voltage

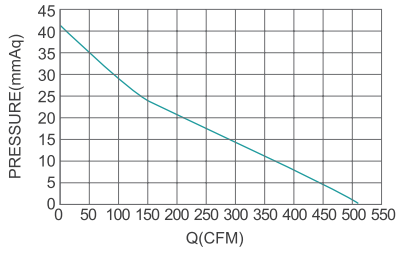

DIMENSIONS DRAWING UNIT：mm

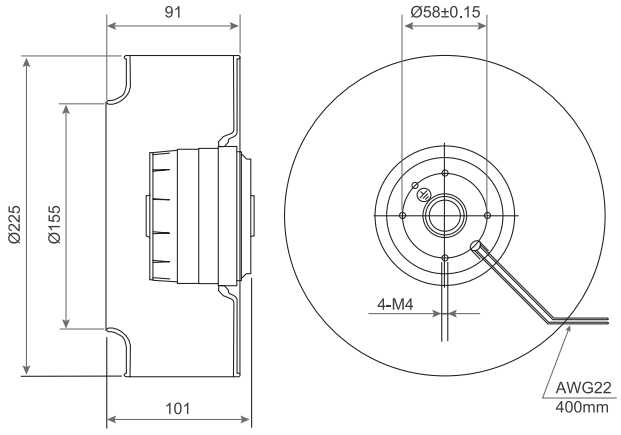

Model No.	Bearing Type	Voltage (VDC)	Current (A)	Power (W)	Speed (RPM)	Air Flow (CFM)	Air Flow (m^3/min)	Air Pressure (mmH2O)	Air Pressure (Inch H2O)	Noise (dBA)
TRC225101B48H	◎	48	1.8	86.4	2200	510	14.43	40.4	1.59	72.0

DC Centrifugal Fan

TRC25092 AF SERIES Ø250X100mm

- Material：Galvanished sheet steel
  材質：鍍鋅板材
- Bearing：◎Two Ball bearing
  軸承：◎滾珠軸承
- Protection Class：IP42
  防護等級：IP42

P&Q Curve At Rated Voltage

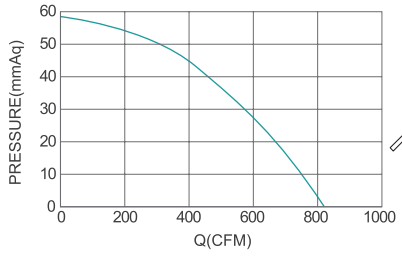

DIMENSIONS DRAWING UNIT：mm

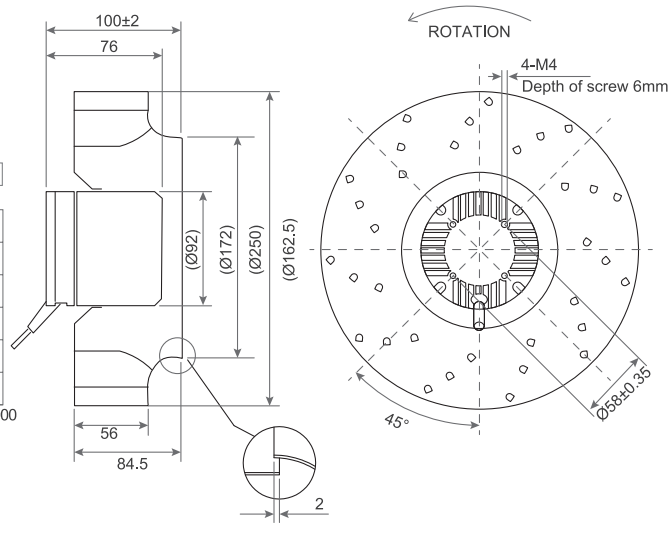

Model No.	Bearing Type	Voltage (VDC)	Current (A)	Power (W)	Speed (RPM)	Air Flow (CFM)	Air Flow (m^3/min)	Air Pressure (mmH2O)	Air Pressure (Inch H2O)	Temperature Min / Max(°C)	Noise (dBA)
TRC25092B24H	◎	24	5.0	120	2500	810	22.92	58.42	2.31	-25°C ~ +60°C	67.0
TRC25092B48H	◎	48	2.5	120	2500	810	22.92	58.42	2.31	-25°C ~ +60°C	67.0

Ⓧ Bearing System ※：Sleeve ★：WRB ◎：Ball

★如果您需要的轉速或電壓或功能不在這份清單上，請與我們業務聯繫 Please contact us, if the SPEC you need is not in the list.

★產品詳細數據及功能請參閱承認書 Please see the approval sheet for more information . ★產品規格變更不另行通知 Specifications are subject to change without notice.

DC Centrifugal Fan

TRC28092 AF SERIES Ø280X105mm

- Material：Galvanished sheet steel
  材質：鍍鋅板材
- Bearing：◎Two Ball bearing
  軸承：◎滾珠軸承
- Protection Class：IP42
  防護等級：IP42

P&Q Curve | At Rated Voltage

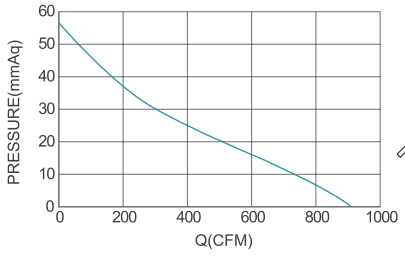

DIMENSIONS DRAWING | UNIT：mm

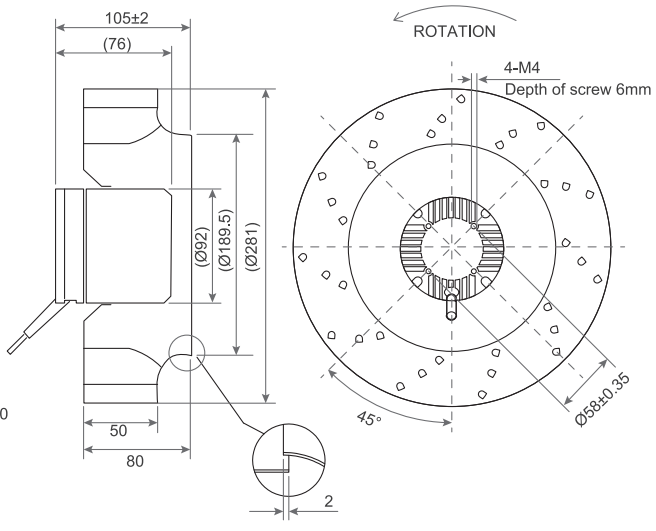

Model No.	Bearing Type	Voltage (VDC)	Current (A)	Power (W)	Speed (RPM)	Air Flow (CFM)	Air Flow (m^3/min)	Air Pressure (mmH₂O)	Air Pressure (Inch H₂O)	Temperature Min / Max(°C)	Noise (dBA)
TRC28092B24H	◎	24	4.36	105	2200	900	25.47	57.1	2.25	-25°C ~ +60°C	75.0
TRC28092B48H	◎	48	2.18	105	2200	900	25.47	57.1	2.25	-25°C ~ +60°C	75.0

DC Centrifugal Fan

TRC31092 AF SERIES Ø310X100mm

- Material：Galvanished sheet steel
  材質：鍍鋅板材
- Bearing：◎Two Ball bearing
  軸承：◎滾珠軸承
- Protection Class：IP42
  防護等級：IP42

P&Q Curve | At Rated Voltage

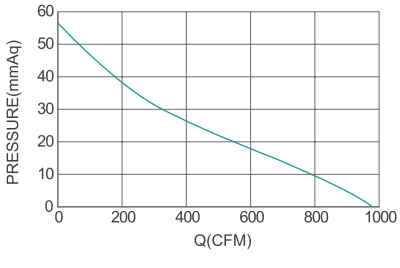

DIMENSIONS DRAWING | UNIT：mm

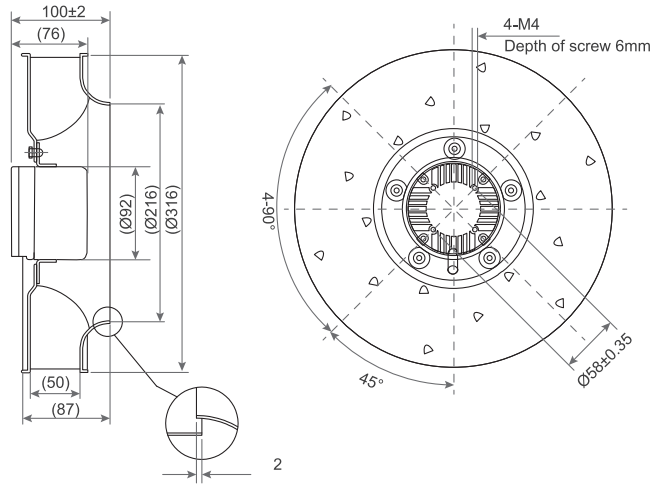

Model No.	Bearing Type	Voltage (VDC)	Current (A)	Power (W)	Speed (RPM)	Air Flow (CFM)	Air Flow (m^3/min)	Air Pressure (mmH₂O)	Air Pressure (Inch H₂O)	Temperature Min / Max(°C)	Noise (dBA)
TRC31092B24H	◎	24	4.8	115	1820	990	28.02	55.88	2.21	-25°C ~ +60°C	67.0
TRC31092B48H	◎	48	2.4	115	1820	990	28.02	55.88	2.21	-25°C ~ +60°C	67.0

Ⓧ Bearing System ※：Sleeve ★：WRB ◎：Ball

★如果您需要的轉速或電壓或功能不在這份清單上，請與我們業務聯繫 Please contact us, if the SPEC you need is not in the list.

★產品詳細數據及功能請參閱承認書 Please see the approval sheet for more information . ★產品規格變更不另行通知 Specifications are subject to change without notice.

DC Centrifugal Fan

TRC355102 AF SERIES Ø355X158mm

- Frame：Sheet Aluminum
  外框材質：鋁合金板材
- Impeller：Sheet Aluminum
  扇葉材質：鋁合金板材
- Bearing：◎Two Ball bearing
  軸承：◎滾珠軸承
- Protection Class：IP42
  防護等級：IP42

P&Q Curve | At Rated Voltage

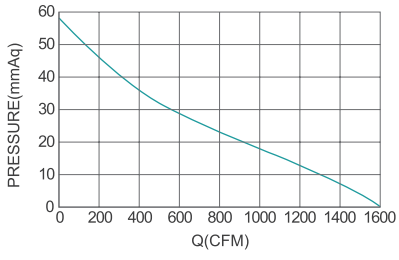

DIMENSIONS DRAWING | UNIT：mm

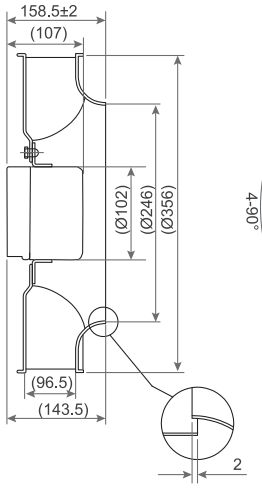

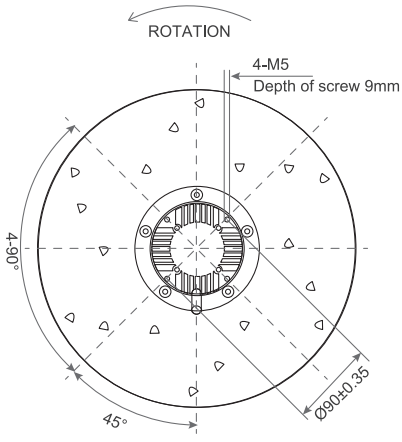

Model No.	Bearing Type	Voltage (VDC)	Current (A)	Power (W)	Speed (RPM)	Air Flow (CFM)	Air Flow (m^3/min)	Air Pressure (mmH₂O)	Air Pressure (Inch H₂O)	Temperature Min / Max(°C)	Noise (dBA)
TRC355102B48H	◎	48	3.5	175	1560	1600	45.28	57.15	2.25	-25°C ~ +60°C	69.0

DC Centrifugal Fan

TRC400102 AF SERIES Ø400X160mm

- Frame：Sheet Aluminum
  外框材質：鋁合金板材
- Impeller：Sheet Aluminum
  扇葉材質：鋁合金板材
- Bearing：◎Two Ball bearing
  軸承：◎滾珠軸承
- Protection Class：IP42
  防護等級：IP42

P&Q Curve | At Rated Voltage

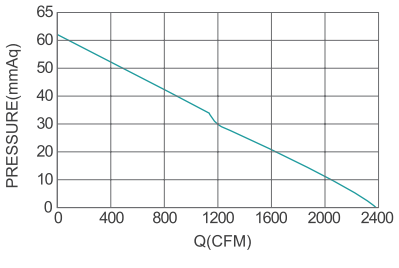

DIMENSIONS DRAWING | UNIT：mm

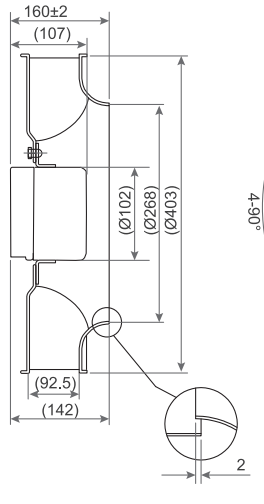

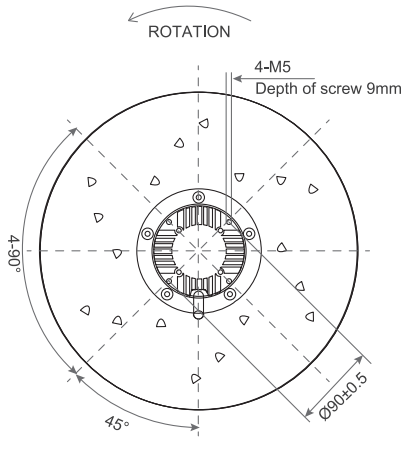

Model No.	Bearing Type	Voltage (VDC)	Current (A)	Power (W)	Speed (RPM)	Air Flow (CFM)	Air Flow (m^3/min)	Air Pressure (mmH₂O)	Air Pressure (Inch H₂O)	Temperature Min / Max(°C)	Noise (dBA)
TRC400102B48H	◎	48	4.17	200	1290	2380	63.75	60.96	2.41	-25°C ~ +60°C	65.0

Ⓧ Bearing System ※：Sleeve ★：WRB ◎：Ball

★如果您需要的轉速或電壓或功能不在這份清單上，請與我們業務聯繫 Please contact us, if the SPEC you need is not in the list.

★產品詳細數據及功能請參閱承認書 Please see the approval sheet for more information . ★產品規格變更不另行通知 Specifications are subject to change without notice.

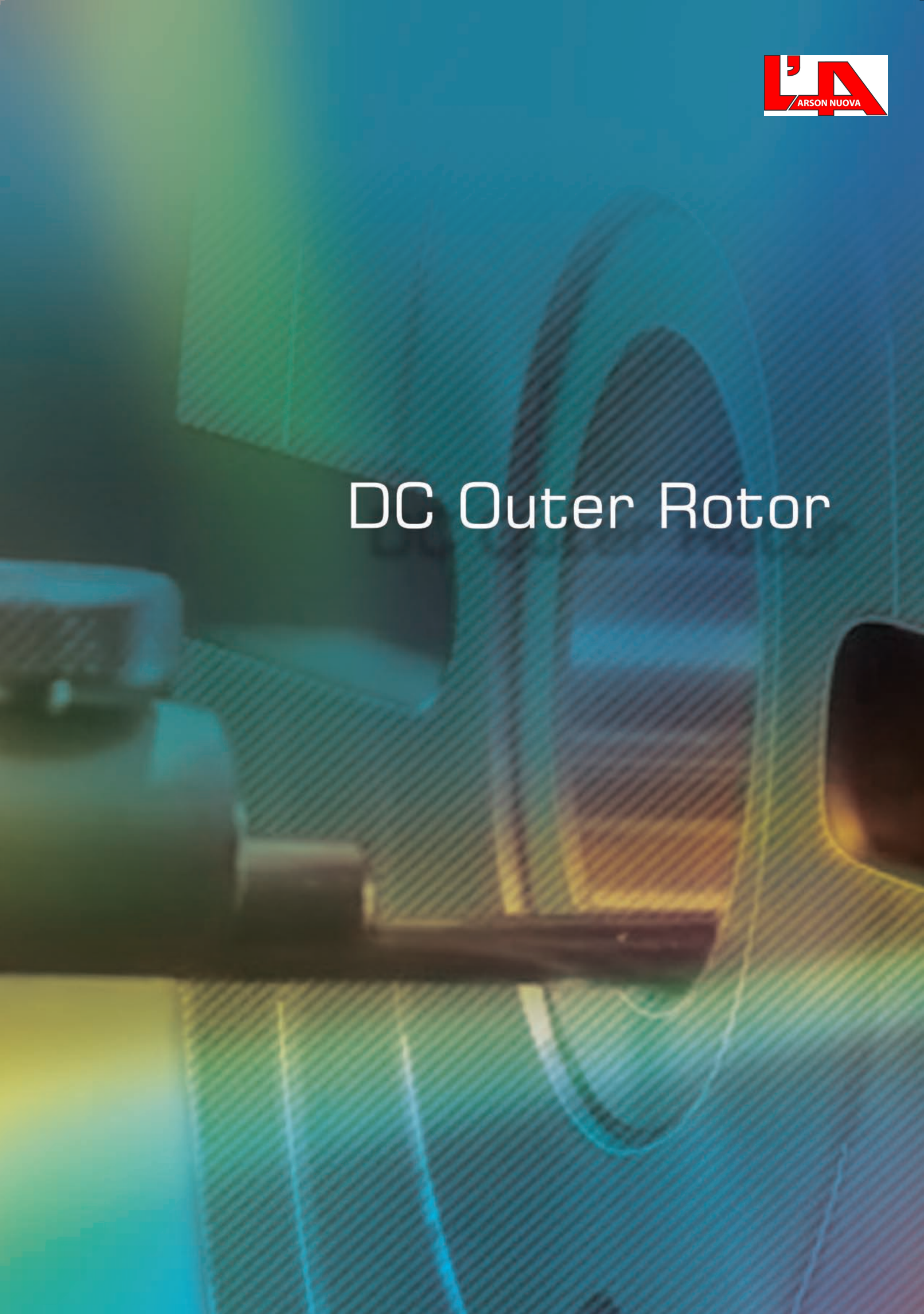

DC Outer Rotor

DC Outer Rotor Fan

TRL30092 AF SERIES Ø300x121.5mm

- Frame：Sheet Aluminum
  外框材質：薄鋼板
- Impeller：Sheet Steel
  扇葉材質：薄鋼板
- Bearing：◎Two Ball bearing
  軸承：◎滾珠軸承
- Ingress Protection：IP42
  防護等級：IP42

P&Q Curve | At Rated Voltage

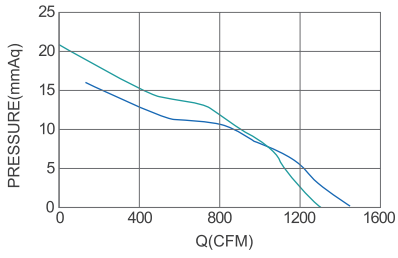

DIMENSIONS DRAWING | UNIT：mm

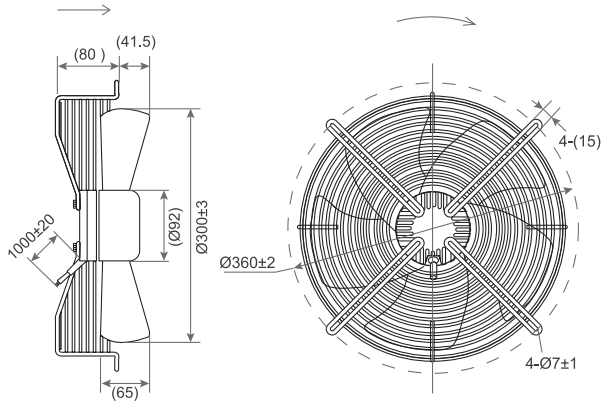

Model No.	Bearing Type	Voltage (VDC)	Current (A)	Power (W)	Speed (RPM)	Air Flow (CFM)	Air Flow (m^3/min)	Air Pressure (mmH2O)	Air Pressure (Inch H2O)	Temperature Min / Max(°C)	Noise (dBA)
TRL30092B24H	◎	24	3.96	95	1770	1293.6	36.74	21.94	0.87	-25°C ~ +60°C	64.0
TRL30092B48H	◎	48	1.98	95	1770	1293.6	36.74	21.94	0.87	-25°C ~ +60°C	64.0
TRL30092B3H	◎	310	0.52	165	2100	1434.7	40.75	16.32	0.64	-25°C ~ +60°C	64.0

DC Outer Rotor Fan

TRL35092 AF SERIES Ø350x138.3mm

- Frame：Sheet Aluminum
  外框材質：薄鋼板
- Impeller：Sheet Steel
  扇葉材質：薄鋼板
- Bearing：◎Two Ball bearing
  軸承：◎滾珠軸承
- Ingress Protection：IP42
  防護等級：IP42

P&Q Curve | At Rated Voltage

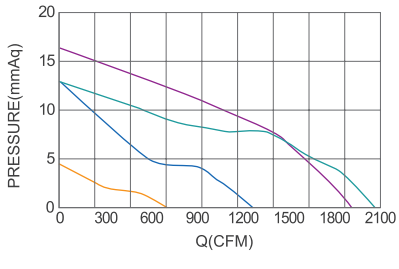

DIMENSIONS DRAWING | UNIT：mm

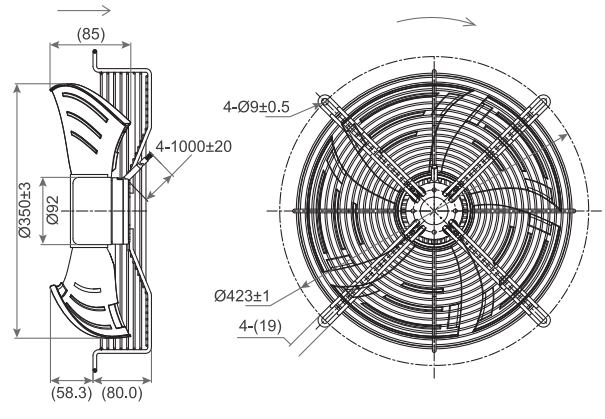

Model No.	Bearing Type	Voltage (VDC)	Current (A)	Power (W)	Speed (RPM)	Air Flow (CFM)	Air Flow (m^3/min)	Air Pressure (mmH2O)	Air Pressure (Inch H2O)	Temperature Min / Max(°C)	Noise (dBA)
TRL35092B24H	◎	24	6.60	160	1530	1880	53.4	16.31	0.64	-25°C ~ +60°C	63.0
TRL35092B48H	◎	48	3.30	160	1530	1880	53.4	16.31	0.64	-25°C ~ +60°C	63.0
TRL30092B3H	◎	310	0.56	175	1800	2050	58.0	12.64	0.50	-25°C ~ +60°C	65.0

X Bearing System ※：Sleeve ★：WRB ◎：Ball

★如果您需要的轉速或電壓或功能不在這份清單上，請與我們業務聯繫 Please contact us, if the SPEC you need is not in the list.

★產品詳細數據及功能請參閱承認書 Please see the approval sheet for more information . ★產品規格變更不另行通知 Specifications are subject to change without notice.

DC Outer Rotor Fan

TRL400102 AF SERIES Ø400x140mm

- Frame：Sheet Aluminum
  外框材質：薄鋼板
- Impeller：Sheet Steel
  扇葉材質：薄鋼板
- Bearing：◎Two Ball bearing
  軸承：◎滾珠軸承
- Ingress Protection：IP42
  防護等級：IP42

P&Q Curve | At Rated Voltage

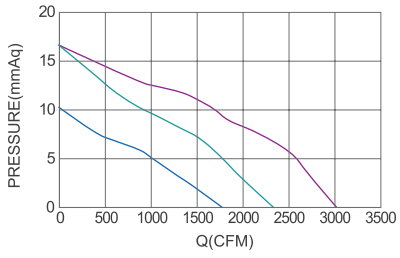

DIMENSIONS DRAWING | UNIT：mm

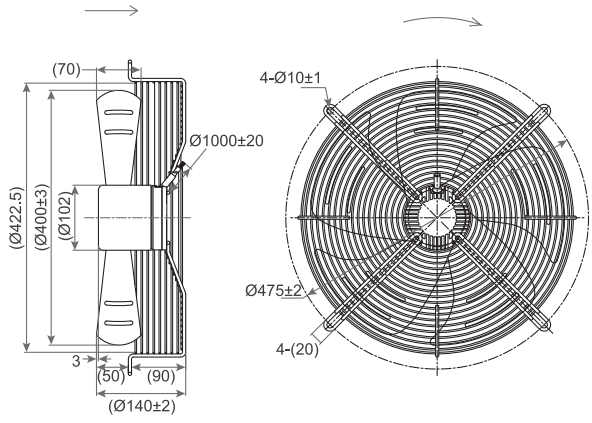

Model No.	Bearing Type	Voltage (VDC)	Current (A)	Power (W)	Speed (RPM)	Air Flow (CFM)	Air Flow (m^3/min)	Air Pressure (mmH₂O)	Air Pressure (Inch H₂O)	Temperature Min / Max(°C)	Noise (dBA)
TRL400102B48M	◎	48	5.80	280	1480	2970	84.05	17.13	0.67	-25°C ~ +60°C	65.0

DC Outer Rotor Fan

TRL45092 AF SERIES Ø450x137mm

- Frame：Sheet Aluminum
  外框材質：薄鋼板
- Impeller：Sheet Steel
  扇葉材質：薄鋼板
- Bearing：◎Two Ball bearing
  軸承：◎滾珠軸承
- Ingress Protection：IP42
  防護等級：IP42

P&Q Curve | At Rated Voltage

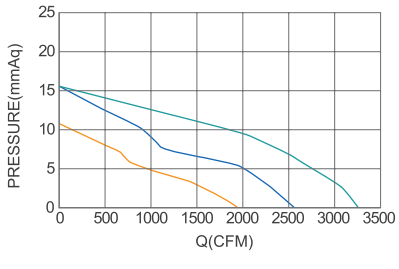

DIMENSIONS DRAWING | UNIT：mm

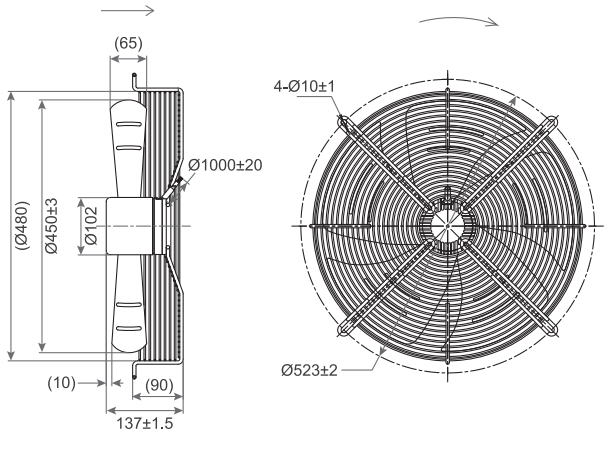

Model No.	Bearing Type	Voltage (VDC)	Current (A)	Power (W)	Speed (RPM)	Air Flow (CFM)	Air Flow (m^3/min)	Air Pressure (mmH₂O)	Air Pressure (Inch H₂O)	Temperature Min / Max(°C)	Noise (dBA)
TRL450102B48M	◎	48	5.80	280	1480	3234	91.85	15.80	0.62	-25°C ~ +60°C	64.0

Ⓧ Bearing System ※：Sleeve ★：WRB ◎：Ball

★如果您需要的轉速或電壓或功能不在這份清單上，請與我們業務聯繫 Please contact us, if the SPEC you need is not in the list.

★產品詳細數據及功能請參閱承認書 Please see the approval sheet for more information . ★產品規格變更不另行通知 Specifications are subject to change without notice.

ARSON NUOVA

DC High Pressure Micro Blower

DC High Pressure Micro Blower

SBA4028 SERIES 40X50x28mm

- Frame：Thermoplastic PBT UL94-V0
  外框材質：環保防火PBT
- Impeller：Thermoplastic PBT UL94-V0
  扇葉材質：環保防火PBT
- Bearing：◎Two Ball bearing
  軸承：◎滾珠軸承

P&Q Curve | At Rated Voltage

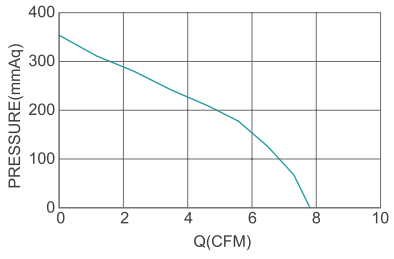

DIMENSIONS DRAWING | UNIT：mm

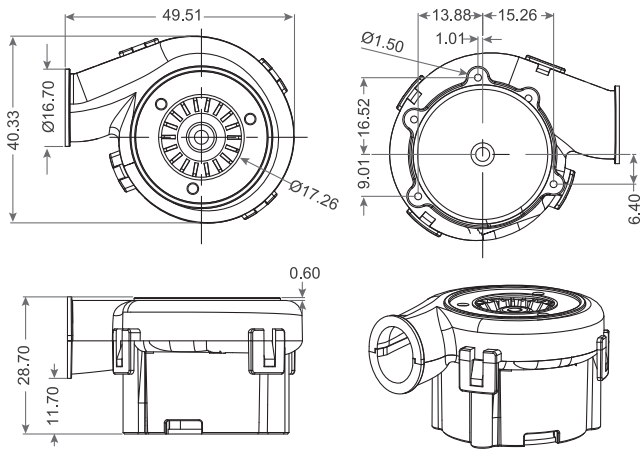

Model No.	Bearing Type	Voltage (VDC)	Current (A)	Power (W)	Speed (RPM)	Air Flow (CFM)	Air Flow (m^3/min)	Air Pressure (mmH2O)	Air Pressure (Inch H2O)	Noise (dBA)
SBA4028B24H	◎	24 (18.0~26.5)	2.0	48.0	50000	11.5	0.33	594.5	23.42	70.0

DC High Pressure Micro Blower

SBA5025 SERIES 54.5X51X25mm

- Frame：Thermoplastic PBT UL94-V0
  外框材質：環保防火PBT
- Impeller：Thermoplastic PBT UL94-V0
  扇葉材質：環保防火PBT
- Bearing：◎Two Ball bearing
  軸承：◎滾珠軸承

P&Q Curve | At Rated Voltage

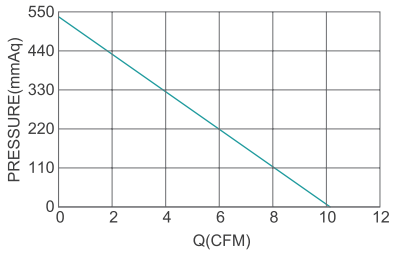

DIMENSIONS DRAWING | UNIT：mm

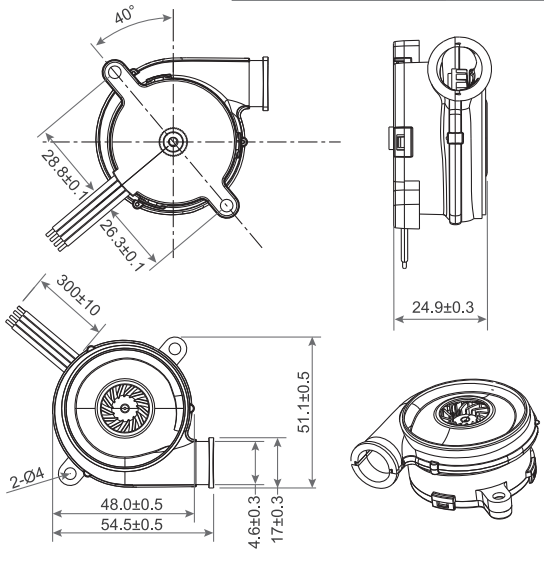

Model No.	Bearing Type	Voltage (VDC)	Current (A)	Power (W)	Speed (RPM)	Air Flow (CFM)	Air Flow (m^3/min)	Air Pressure (mmH2O)	Air Pressure (Inch H2O)	Noise (dBA)
SBA5025B12H	◎	12 (8.5~13.5)	2.8	33.6	40000	10.10	0.286	538.0	21.18	67.2
SBA5025B24H	◎	24 (18.0~26.5)	1.4	33.6	40000	10.10	0.286	538.0	21.18	67.2

Bearing System ※：Sleeve ★：WRB ◎：Ball

★如果您需要的轉速或電壓或功能不在這份清單上，請與我們業務聯繫 Please contact us, if the SPEC you need is not in the list.

★產品詳細數據及功能請參閱承認書 Please see the approval sheet for more information . ★產品規格變更不另行通知 Specifications are subject to change without notice.

DC High Pressure Micro Blower

SBA5025 SERIES 54.5X50X30mm

- Frame：Thermoplastic PBT UL94-V0
  外框材質：環保防火PBT
- Impeller：Thermoplastic PBT UL94-V0
  扇葉材質：環保防火PBT
- Bearing：◎Two Ball bearing
  軸承：◎滾珠軸承

P&Q Curve | At Rated Voltage

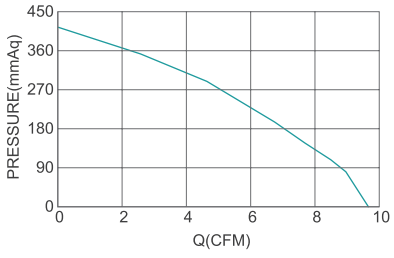

DIMENSIONS DRAWING | UNIT：mm

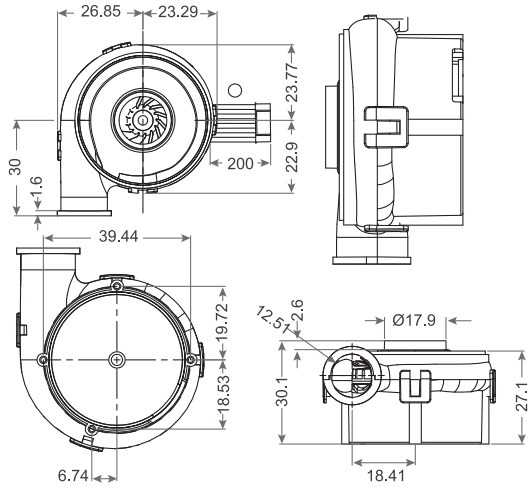

Model No.	Bearing Type	Voltage (VDC)	Current (A)	Power (W)	Speed (RPM)	Air Flow (CFM)	Air Flow (m^3/min)	Air Pressure (mmH_2O)	Air Pressure (Inch H_2O)	Noise (dBA)
SBA5025B24H	◎	24 (5.0~30.0)	1.0	24.0	37000	9.5	0.27	412.8	16.25	67.0

DC High Pressure Micro Blower

SBA5060 SERIES Ø53X59mm

- Frame：Thermoplastic PBT UL94-V0
  外框材質：環保防火PBT
- Impeller：Thermoplastic PBT UL94-V0
  扇葉材質：環保防火PBT
- Bearing：◎Two Ball bearing
  軸承：◎滾珠軸承

P&Q Curve | At Rated Voltage

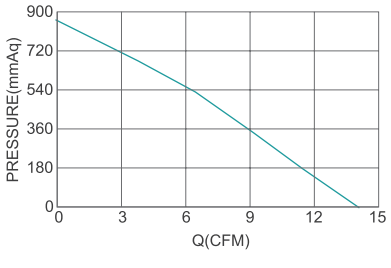

DIMENSIONS DRAWING | UNIT：mm

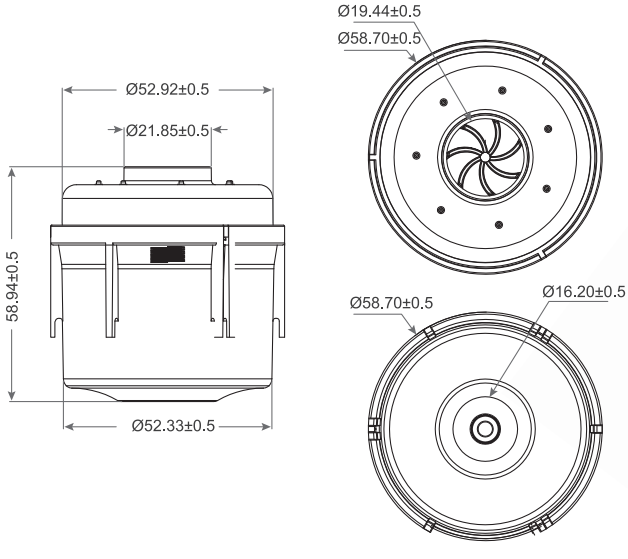

Model No.	Bearing Type	Voltage (VDC)	Current (A)	Power (W)	Speed (RPM)	Air Flow (CFM)	Air Flow (m^3/min)	Air Pressure (mmH_2O)	Air Pressure (Inch H_2O)	Noise (dBA)
SBA5060B24H	◎	24 (18.0~26.5)	4.2	100.8	31000	14.0	0.396	859.5	33.86	71.3

Ⓧ Bearing System ※：Sleeve ★：WRB ◎：Ball

★如果您需要的轉速或電壓或功能不在這份清單上，請與我們業務聯繫 Please contact us, if the SPEC you need is not in the list.

★產品詳細數據及功能請參閱承認書 Please see the approval sheet for more information . ★產品規格變更不另行通知 Specifications are subject to change without notice.

DC High Pressure Micro Blower

SBA6570 SERIES 65.5X63X70mm

- Frame：Thermoplastic PBT UL94-V0
  外框材質：環保防火PBT
- Impeller：Thermoplastic PBT UL94-V0
  扇葉材質：環保防火PBT
- Bearing：◎Two Ball bearing
  軸承：◎滾珠軸承

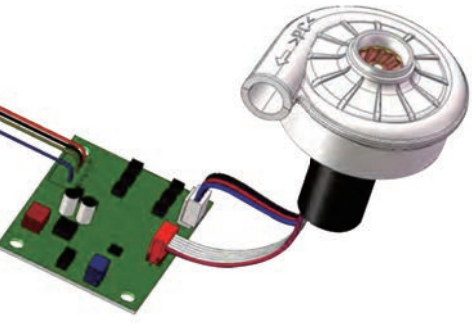

P&Q Curve | At Rated Voltage

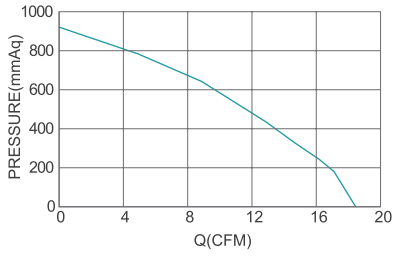

DIMENSIONS DRAWING | UNIT：mm

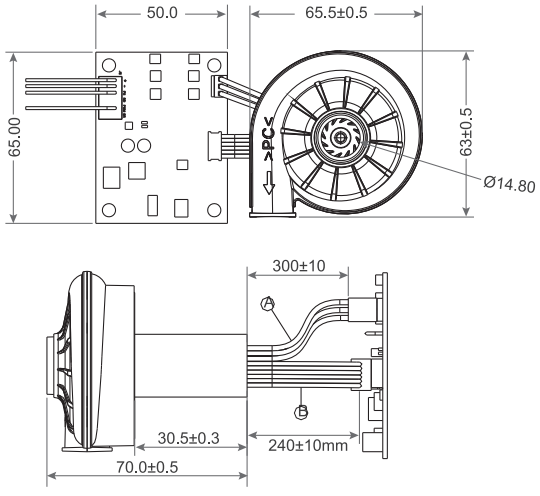

Model No.	Bearing Type	Voltage (VDC)	Current (A)	Power (W)	Speed (RPM)	Air Flow (CFM)	Air Flow (m^3/min)	Air Pressure (mmH₂O)	Air Pressure (Inch H₂O)	Noise (dBA)
SBA6570B24H	◎	24 (12.0~25.0)	3.1	74.4	48000	18.09	0.51	925.7	36.44	70.0

DC High Pressure Micro Blower

SBA7040 SERIES 66X70X46mm

- Frame：Thermoplastic PBT UL94-V0
  外框材質：環保防火PBT
- Impeller：Thermoplastic PBT UL94-V0
  扇葉材質：環保防火PBT
- Bearing：◎Two Ball bearing
  軸承：◎滾珠軸承

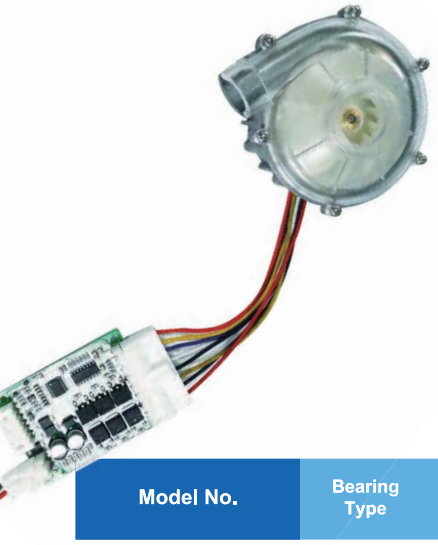

P&Q Curve | At Rated Voltage

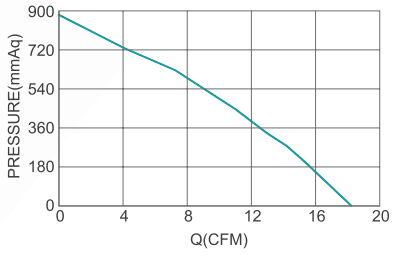

DIMENSIONS DRAWING | UNIT：mm

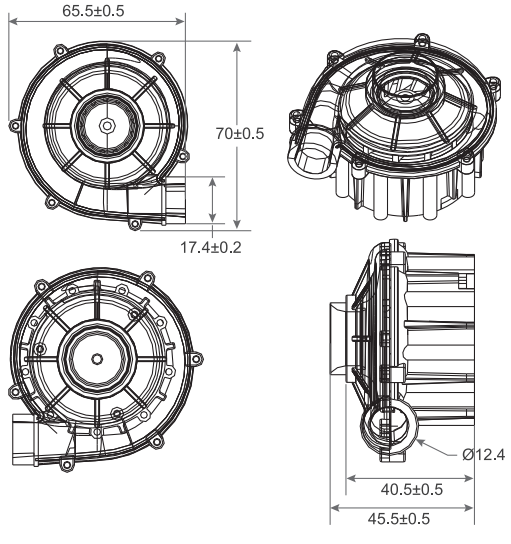

Model No.	Bearing Type	Voltage (VDC)	Current (A)	Power (W)	Speed (RPM)	Air Flow (CFM)	Air Flow (m^3/min)	Air Pressure (mmH₂O)	Air Pressure (Inch H₂O)	Noise (dBA)
SBA7040B24H	◎	24 (12.0~25.0)	3.5	84.0	37000	18.36	0.52	884.75	34.83	70.0

Ⓧ Bearing System ※：Sleeve ★：WRB ◎：Ball

★如果您需要的轉速或電壓或功能不在這份清單上，請與我們業務聯繫 Please contact us, if the SPEC you need is not in the list.

★產品詳細數據及功能請參閱承認書 Please see the approval sheet for more information . ★產品規格變更不另行通知 Specifications are subject to change without notice.

DC High Pressure Micro Blower

SBA7050 SERIES 74X67.8X47mm

- Frame：Thermoplastic PBT UL94-V0
  外框材質：環保防火PBT
- Impeller：Thermoplastic PBT UL94-V0
  扇葉材質：環保防火PBT
- Bearing：◎Two Ball bearing
  軸承：◎滾珠軸承

P&Q Curve | At Rated Voltage

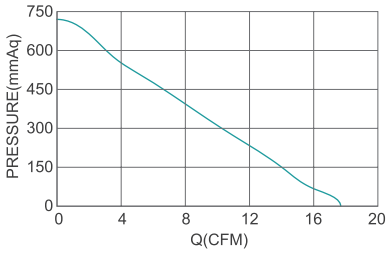

DIMENSIONS DRAWING | UNIT：mm

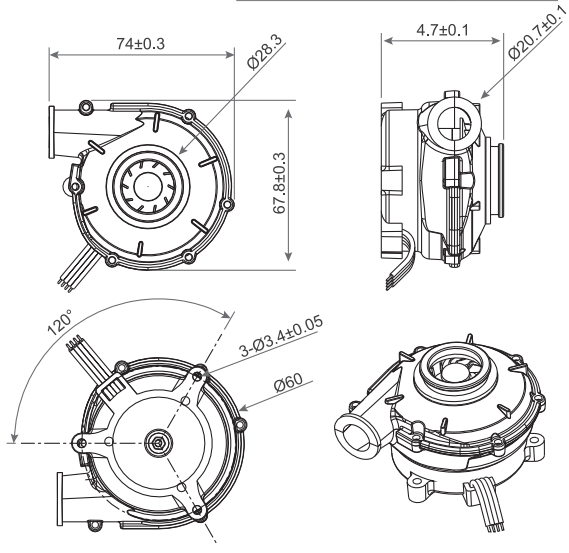

Model No.	Bearing Type	Voltage (VDC)	Current (A)	Power (W)	Speed (RPM)	Air Flow (CFM)	Air Flow (m^3/min)	Air Pressure (mmH2O)	Air Pressure (Inch H2O)	Noise (dBA)
SBA7050B12H	◎	12 (7.5~13.5)	6.0	72.0	38000	17.84	0.51	721.0	28.39	71.7
SBA7050B24H	◎	24 (18.0~26.5)	3.0	72.0	38000	17.84	0.51	721.0	28.39	71.7

DC High Pressure Micro Blower

SBA7060 SERIES 69X79X56mm

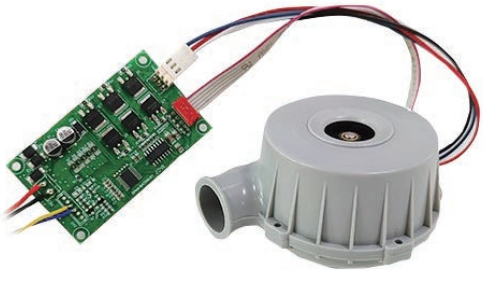

- Frame：Thermoplastic PBT UL94-V0
  外框材質：環保防火PBT
- Impeller：Thermoplastic PBT UL94-V0
  扇葉材質：環保防火PBT
- Bearing：◎Two Ball bearing
  軸承：◎滾珠軸承

P&Q Curve | At Rated Voltage

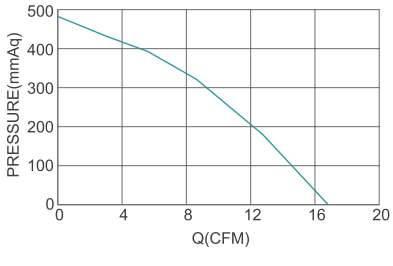

DIMENSIONS DRAWING | UNIT：mm

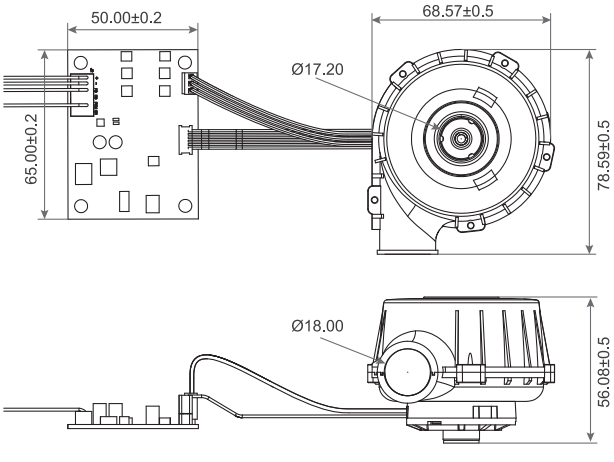

Model No.	Bearing Type	Voltage (VDC)	Current (A)	Power (W)	Speed (RPM)	Air Flow (CFM)	Air Flow (m^3/min)	Air Pressure (mmH2O)	Air Pressure (Inch H2O)	Noise (dBA)
SBA7060B24H	◎	24 (18.0~26.5)	1.5	36.0	32000	16.8	0.48	488.8	19.25	71.3

Ⓧ Bearing System ※：Sleeve ★：WRB ◎：Ball

★如果您需要的轉速或電壓或功能不在這份清單上，請與我們業務聯繫 Please contact us, if the SPEC you need is not in the list.

★產品詳細數據及功能請參閱承認書 Please see the approval sheet for more information . ★產品規格變更不另行通知 Specifications are subject to change without notice.

DC High Pressure Micro Blower

SBA7570 SERIES 63X67X90mm

- Frame：Thermoplastic PBT UL94-V0
  外框材質：環保防火PBT
- Impeller：Thermoplastic PBT UL94-V0
  扇葉材質：環保防火PBT
- Bearing：◎Two Ball bearing
  軸承：◎滾珠軸承

P&Q Curve | At Rated Voltage

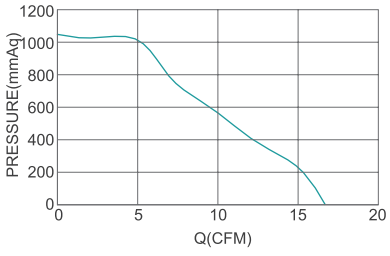

DIMENSIONS DRAWING | UNIT：mm

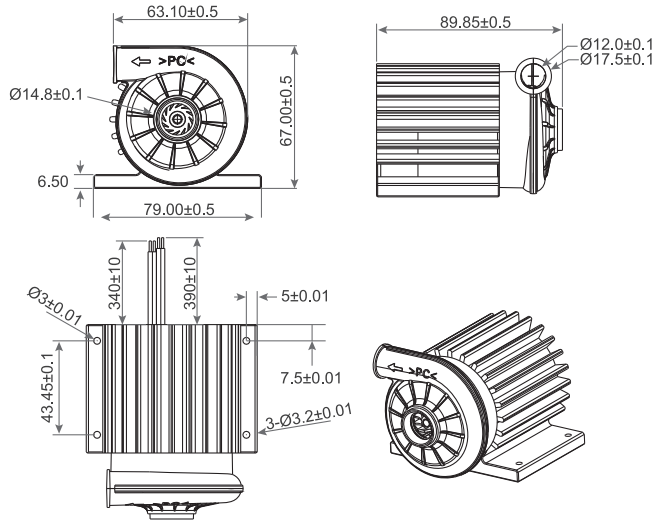

Model No.	Bearing Type	Voltage (VDC)	Current (A)	Power (W)	Speed (RPM)	Air Flow (CFM)	Air Flow (m^3/min)	Air Pressure (mmH₂O)	Air Pressure (Inch H₂O)	Noise (dBA)
SBA7570B24H	◎	24 (18.0~26.5)	2.9	69.6	42000	16.73	0.47	1058.75	41.68	75.1

DC High Pressure Micro Blower

SBA7060 SERIES 77X66X57mm

- Frame：Thermoplastic PBT UL94-V0
  外框材質：環保防火PBT
- Impeller：Thermoplastic PBT UL94-V0
  扇葉材質：環保防火PBT
- Bearing：◎Two Ball bearing
  軸承：◎滾珠軸承

P&Q Curve | At Rated Voltage

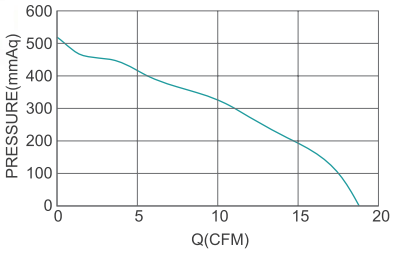

DIMENSIONS DRAWING | UNIT：mm

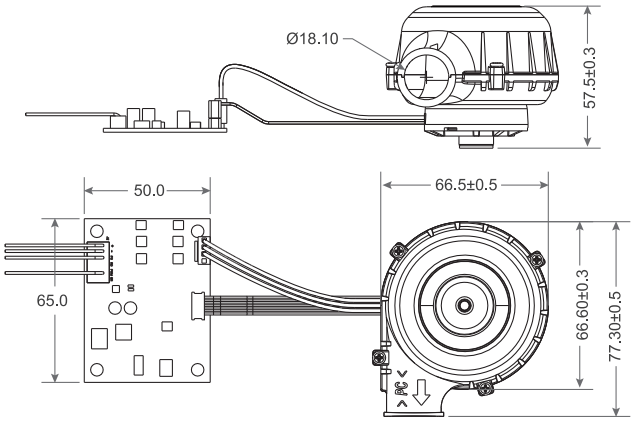

Model No.	Bearing Type	Voltage (VDC)	Current (A)	Power (W)	Speed (RPM)	Air Flow (CFM)	Air Flow (m^3/min)	Air Pressure (mmH₂O)	Air Pressure (Inch H₂O)	Noise (dBA)
SBA7060B24H	◎	24 (18.0~26.5)	1.8	43.2	31100	18.71	0.53	519.5	20.45	70.0

Bearing System ※：Sleeve ★：WRB ◎：Ball

★如果您需要的轉速或電壓或功能不在這份清單上，請與我們業務聯繫 Please contact us, if the SPEC you need is not in the list.

★產品詳細數據及功能請參閱承認書 Please see the approval sheet for more information . ★產品規格變更不另行通知 Specifications are subject to change without notice.

DC High Pressure Micro Blower

SBA8060 SERIES 80X77X60mm

- Frame：Thermoplastic PBT UL94-V0
  外框材質：環保防火PBT
- Impeller：Thermoplastic PBT UL94-V0
  扇葉材質：環保防火PBT
- Bearing：◎Two Ball bearing
  軸承：◎滾珠軸承

P&Q Curve | At Rated Voltage

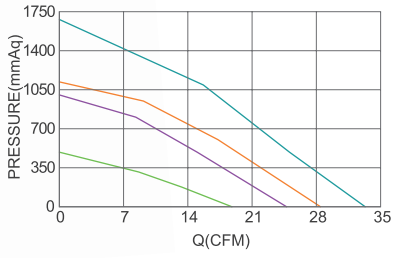

DIMENSIONS DRAWING | UNIT：mm

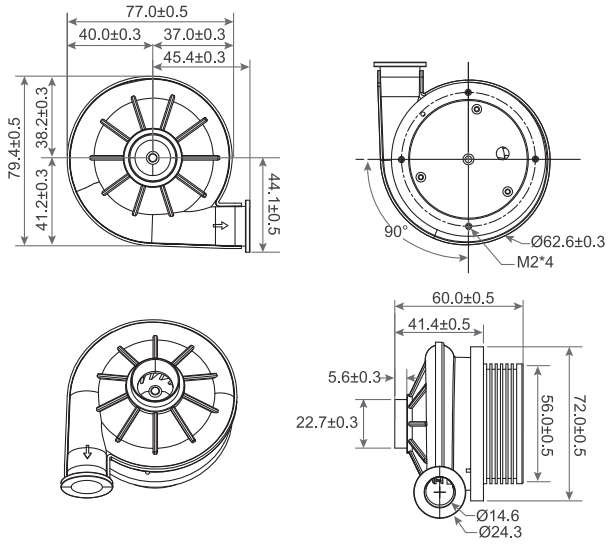

Model No.	Bearing Type	Voltage (VDC)	Current (A)	Power (W)	Speed (RPM)	Air Flow (CFM)	Air Flow (m^3/min)	Air Pressure (mmH_2O)	Air Pressure (Inch H_2O)	Noise (dBA)
SBA8060B24L	◎	24 (18.0~26.5)	1.85	44.4	25000	18.4	0.515	497.8	19.6	68.4
SBA8060B24M	◎	24 (18.0~26.5)	4.30	103.2	35000	25.4	0.719	1009.5	39.7	70.9
SBA8060B24M-02	◎	24 (18.0~26.5)	5.40	129.6	37000	28.1	0.795	1119.5	44.1	70.9
SBA8060B24H	◎	24 (18.0~26.5)	8.50	204.0	44000	33.8	0.957	1681.3	66.2	84.3

DC High Pressure Micro Blower

SBA9725 SERIES 93X130X72mm

- Frame：Thermoplastic PBT UL94-V0
  外框材質：環保防火PBT
- Impeller：Thermoplastic PBT UL94-V0
  扇葉材質：環保防火PBT
- Bearing：◎Two Ball bearing
  軸承：◎滾珠軸承

P&Q Curve | At Rated Voltage

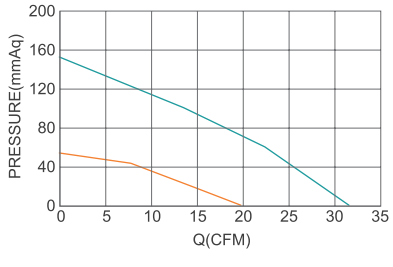

DIMENSIONS DRAWING | UNIT：mm

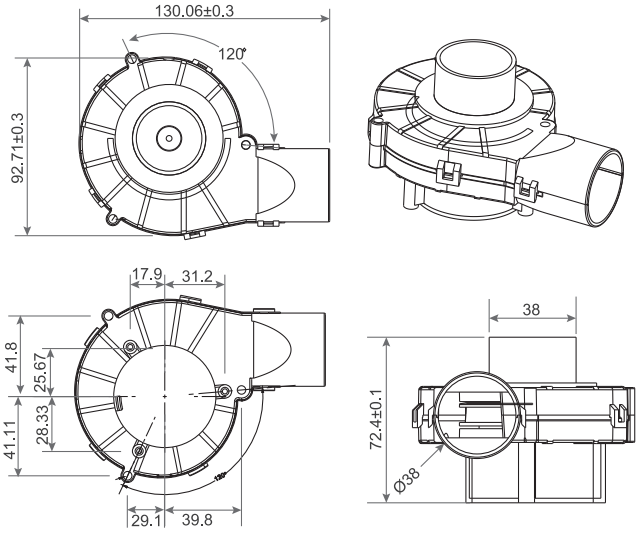

Model No.	Bearing Type	Voltage (VDC)	Current (A)	Power (W)	Speed (RPM)	Air Flow (CFM)	Air Flow (m^3/min)	Air Pressure (mmH_2O)	Air Pressure (Inch H_2O)	Noise (dBA)
SBA9725B12H	◎	12 (7.5~13.5)	0.60	7.2	9000	19.7	0.56	58.2	2.30	59.9
SBA9725B12VH	◎	12 (7.5~13.5)	1.50	18.0	14000	30.9	0.88	153.2	6.03	68.6
SBA9725B24H	◎	24 (18.0~26.5)	0.30	7.2	9000	19.7	0.56	58.2	2.30	59.9
SBA9725B24VH	◎	24 (18.0~26.5)	0.75	18.0	14000	30.9	0.88	153.2	6.03	68.6

Ⓧ Bearing System ※：Sleeve ★：WRB ◎：Ball

★如果您需要的轉速或電壓或功能不在這份清單上，請與我們業務聯繫 Please contact us, if the SPEC you need is not in the list.

★產品詳細數據及功能請參閱承認書 Please see the approval sheet for more information . ★產品規格變更不另行通知 Specifications are subject to change without notice.

DC High Pressure Micro Blower

SBA12060 SERIES 127X127X74mm

- Frame：Thermoplastic PBT UL94-V0
  外框材質：環保防火PBT
- Impeller：Thermoplastic PBT UL94-V0
  扇葉材質：環保防火PBT
- Bearing：◎Two Ball bearing
  軸承：◎滾珠軸承

P&Q Curve | At Rated Voltage

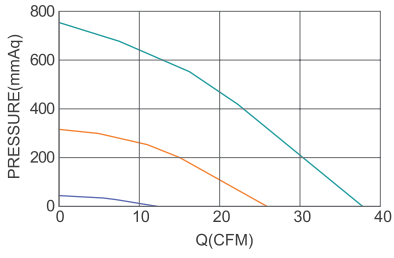

DIMENSIONS DRAWING | UNIT：mm

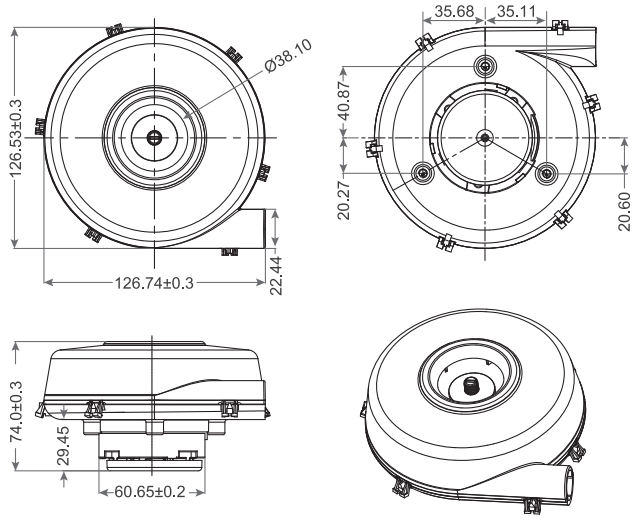

Model No.	Bearing Type	Voltage (VDC)	Current (A)	Power (W)	Speed (RPM)	Air Flow (CFM)	Air Flow (m^3/min)	Air Pressure (mmH₂O)	Air Pressure (Inch H₂O)	Noise (dBA)
SBA12060B12M	◎	12 (7.0~13.5)	0.56	6.7	5000	13.0	0.368	57.1	2.25	57.1
SBA12060B12H	◎	12 (7.0~13.5)	5.00	60.0	11000	26.3	0.744	326.8	12.87	67.4
SBA12060B12VH	◎	12 (7.0~13.5)	12.40	148.8	15000	37.3	1.056	752.0	29.61	71.9
SBA12060B24M	◎	24 (18.0~26.5)	0.28	6.7	5000	13.0	0.368	57.1	2.25	57.1
SBA12060B24H	◎	24 (18.0~26.5)	2.50	60.0	11000	26.3	0.744	326.8	12.87	67.4
SBA12060B24VH	◎	24 (18.0~26.5)	6.20	148.8	15000	37.3	1.056	752.0	29.61	71.9

Ⓧ Bearing System ※：Sleeve ★：WRB ◎：Ball

★如果您需要的轉速或電壓或功能不在這份清單上，請與我們業務聯繫 Please contact us, if the SPEC you need is not in the list.

★產品詳細數據及功能請參閱承認書 Please see the approval sheet for more information . ★產品規格變更不另行通知 Specifications are subject to change without notice.

L'A
ARSON NUOVA
DC ARGB FAN

DC ARGB Fan
TRS1225 i SERIES 120X120X25mm

- Frame：PBT-GP
  外框材質：環保防火PBT-GP
- Impeller：PBT-PC
  扇葉材質：環保防火PBT-GP
- Fan Led Type：Light Emitting Diodes 5050 Impeller X8
  燈珠材質及數量：發光二極體 5050內8顆

P&Q Curve At Rated Voltage

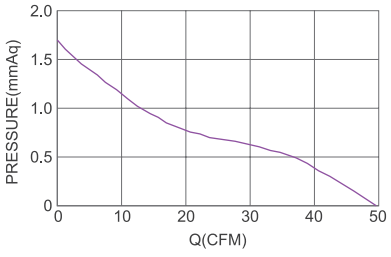

DIMENSIONS DRAWING UNIT：mm

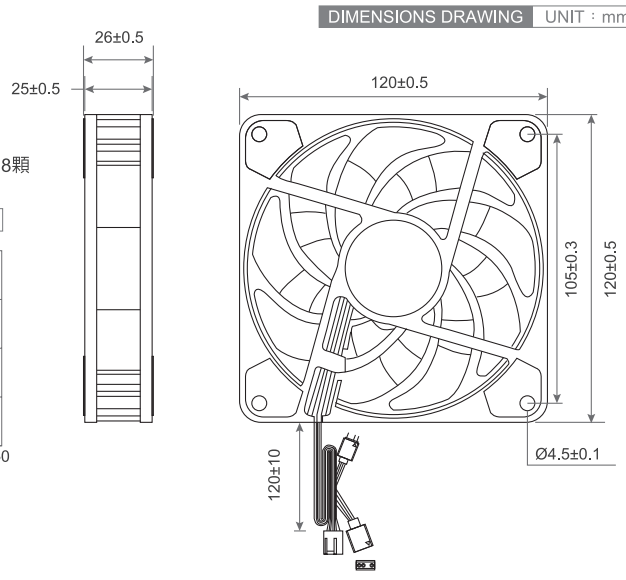

Model No.	Bearing Type	Voltage (VDC)	Current (A)	Power (W)	Speed (RPM)	Air Flow (CFM)	Air Flow (m^3/min)	Air Pressure (mmH_2O)	Air Pressure (Inch H_2O)	Noise (dBA)
TRS1225S12M.W.F.W.0	★	12 (5.0~13.8)	0.23	2.27	1800	48.5	1.37	1.3	0.05	30

DC ARGB Fan
TRS1225 IB SERIES 120X120X25mm

- Frame：PBT-GP
  外框材質：環保防火PBT-GP
- Impeller：PBT-PC
  扇葉材質：環保防火PBT-GP
- Fan Led Type：Light Emitting Diodes 5050 Impeller X8
  燈珠材質及數量：發光二極體 5050內8顆

P&Q Curve At Rated Voltage

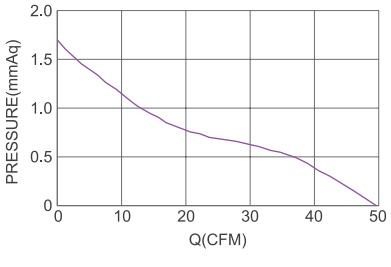

DIMENSIONS DRAWING UNIT：mm

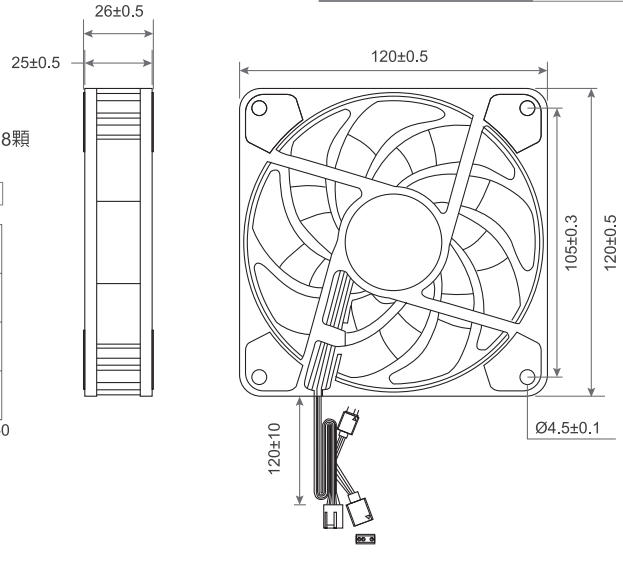

Model No.	Bearing Type	Voltage (VDC)	Current (A)	Power (W)	Speed (RPM)	Air Flow (CFM)	Air Flow (m^3/min)	Air Pressure (mmH_2O)	Air Pressure (Inch H_2O)	Noise (dBA)
TRS1225S12M.W.F.B.0	★	12 (5.0~13.8)	0.23	2.27	1800	48.5	1.37	1.3	0.05	30

X Bearing System ※：Sleeve ★：WRB Bearing ◎：Ball

★如果您需要的轉速或電壓或功能不在這份清單上，請與我們業務聯繫 Please contact us, if the SPEC you need is not in the list.

★產品詳細數據及功能請參閱承認書 Please see the approval sheet for more information . ★產品規格變更不另行通知 Specifications are subject to change without notice.

DC ARGB Fan
TRS1225 IC SERIES 120X120X25mm

- Frame：PBT-HB
  外框材質：環保防火PBT-HB
- Impeller：PBT-GP
  扇葉材質：環保防火PBT-GP
- Fan Led Type：Light Emitting Diodes 5050 Impeller 8+Frame 16
  燈珠材質及數量：發光二極體 5050內8顆+外16顆

P&Q Curve | At Rated Voltage

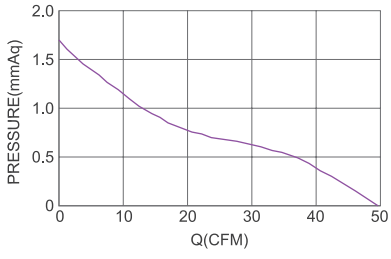

DIMENSIONS DRAWING | UNIT：mm

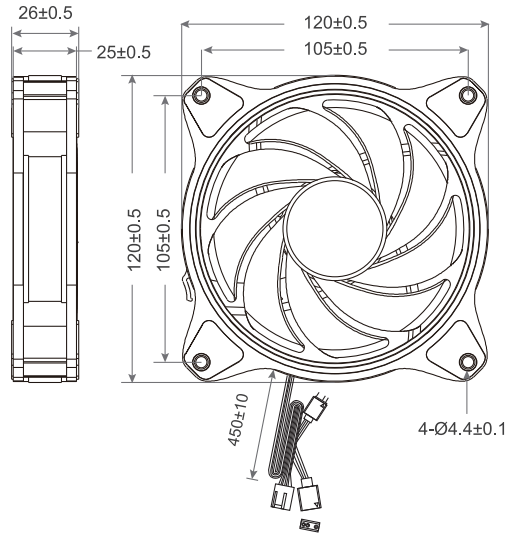

Model No.	Bearing Type	Voltage (VDC)	Current (A)	Power (W)	Speed (RPM)	Air Flow (CFM)	Air Flow (m^3/min)	Air Pressure (mmH₂O)	Air Pressure (Inch H₂O)	Noise (dBA)
TRS1225S12M.W.R.W.1	★	12 (5.0~13.8)	0.18	2.16	1800	43.82	1.24	1.48	0.59	30.2

DC ARGB Fan
TRS1225 ID SERIES 120X120X25mm

- Frame：PBT-HB
  外框材質：環保防火PBT-HB
- Impeller：PBT-GP
  扇葉材質：環保防火PBT-GP
- Fan Led Type：Light Emitting Diodes 5050 Impeller 8+Frame 16
  燈珠材質及數量：發光二極體 5050內8顆+外16顆

P&Q Curve | At Rated Voltage

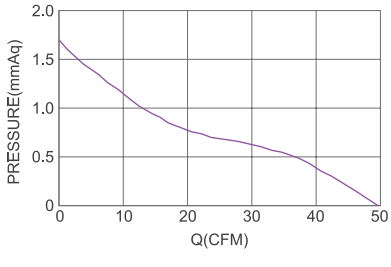

DIMENSIONS DRAWING | UNIT：mm

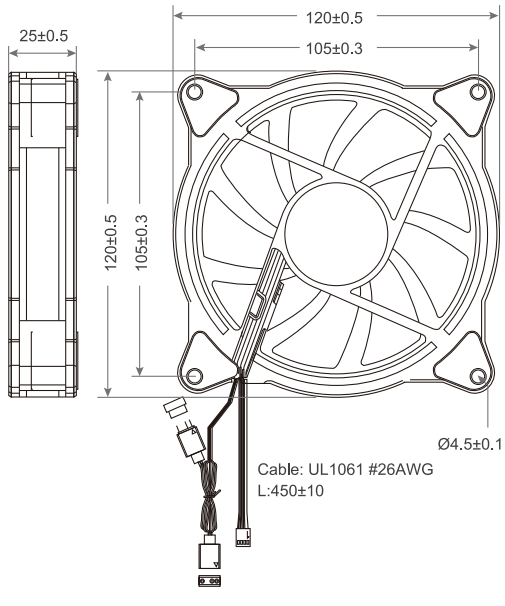

Model No.	Bearing Type	Voltage (VDC)	Current (A)	Power (W)	Speed (RPM)	Air Flow (CFM)	Air Flow (m^3/min)	Air Pressure (mmH₂O)	Air Pressure (Inch H₂O)	Noise (dBA)
TRS1225S12M.W.R.B.1	★	12 (5.0~13.8)	0.18	2.16	1800	43.82	1.24	1.48	0.59	30.2

X Bearing System ※：Sleeve ★：WRB Bearing ◎：Ball

★如果您需要的轉速或電壓或功能不在這份清單上，請與我們業務聯繫 Please contact us, if the SPEC you need is not in the list.

★產品詳細數據及功能請參閱承認書 Please see the approval sheet for more information . ★產品規格變更不另行通知 Specifications are subject to change without notice.

DC ARGB Fan
TRS1225 IE SERIES 120X120X25mm

- Frame：PBT-HB
  外框材質：環保非防火PBT-HB
- Impeller：PC-GP
  扇葉材質：環保非防火PC-GP

P&Q Curve | At Rated Voltage

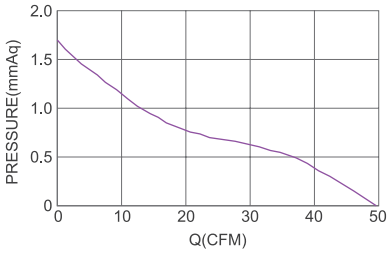

DIMENSIONS DRAWING | UNIT：mm

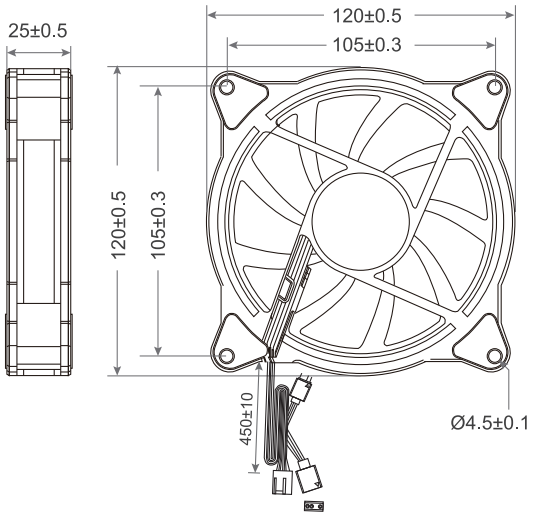

Model No.	Bearing Type	Voltage (VDC)	Current (A)	Power (W)	Speed (RPM)	Air Flow (CFM)	Air Flow (m^3/min)	Air Pressure (mmH_2O)	Air Pressure (Inch H_2O)	Noise (dBA)
TRS1225S12M.W.R.W.1	★	12 (5.0~13.8)	0.19	2.28	1800	60.5	1.71	1.72	0.07	28.8

DC ARGB Fan
TRS1425 I SERIES 140X140X25mm

- Frame：PBT-HB
  外框材質：環保非防火PBT-HB
- Impeller：PC-GP
  扇葉材質：環保非防火PC-GP

P&Q Curve | At Rated Voltage

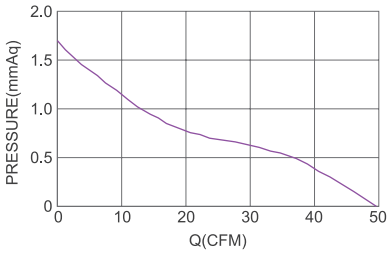

DIMENSIONS DRAWING | UNIT：mm

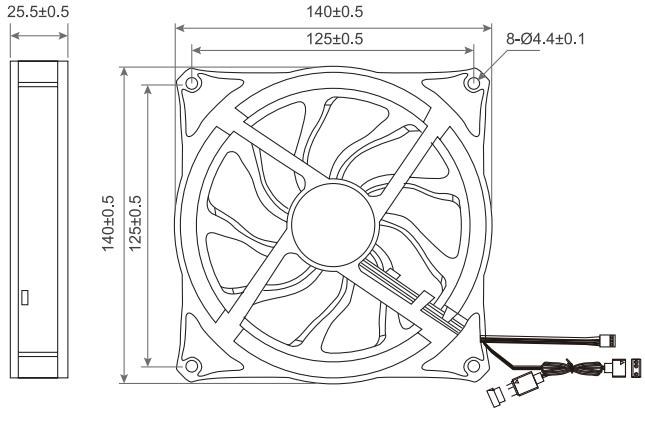

Model No.	Bearing Type	Voltage (VDC)	Current (A)	Power (W)	Speed (RPM)	Air Flow (CFM)	Air Flow (m^3/min)	Air Pressure (mmH_2O)	Air Pressure (Inch H_2O)	Noise (dBA)
TRS1425S12M.W.F.W.1	★	12 (5.0~13.8)	0.19	2.28	1800	60.5	1.71	1.72	0.07	28.8

Ⓧ Bearing System ※：Sleeve ★：WRB Bearing ◎：Ball

★如果您需要的轉速或電壓或功能不在這份清單上，請與我們業務聯繫 Please contact us, if the SPEC you need is not in the list.

★產品詳細數據及功能請參閱承認書 Please see the approval sheet for more information . ★產品規格變更不另行通知 Specifications are subject to change without notice.

Integrated Water Cooling
LCF120 SERIES

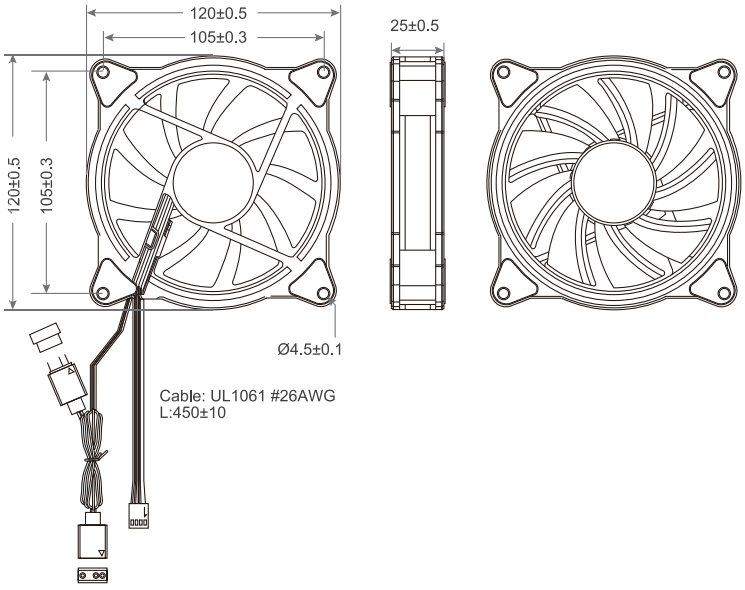

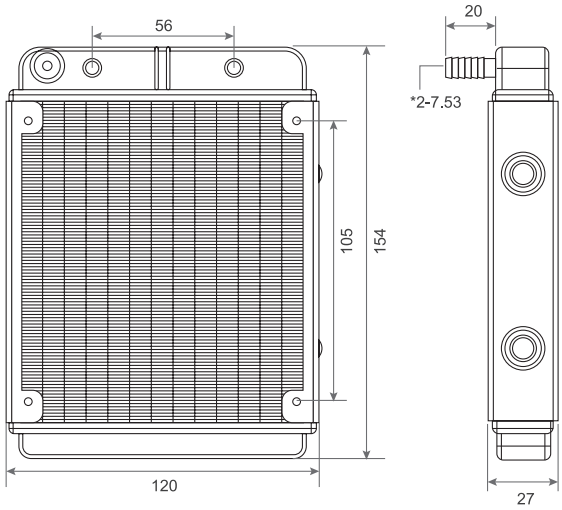

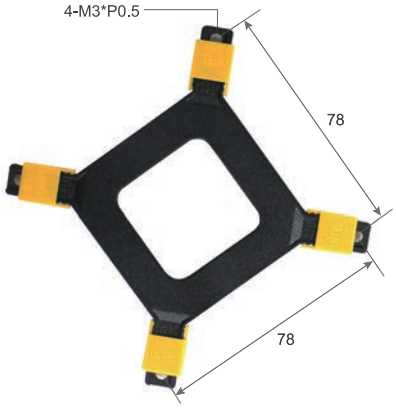

Model No.	Bearing Type	Voltage (VDC)	Current (A)	Power (W)	Speed (RPM)	Air Flow (CFM)	Air Flow (m^3/min)	Air Pressure (mmH$_2$O)	Air Pressure (Inch H$_2$O)	Noise (dBA)
LCF120S1	★	12(5~13.8)	0.19	2.28	1800	60.5	1.71	1.72	0.07	28.8

(X) Bearing System ※ : Sleeve ★ : WRB Bearing ◎ : Ball

★如果您需要的轉速或電壓或功能不在這份清單上，請與我們業務聯繫 Please contact us, if the SPEC you need is not in the list.

★產品詳細數據及功能請參閱承認書 Please see the approval sheet for more information . ★產品規格變更不另行通知 Specifications are subject to change without notice.

LCF240 SERIES

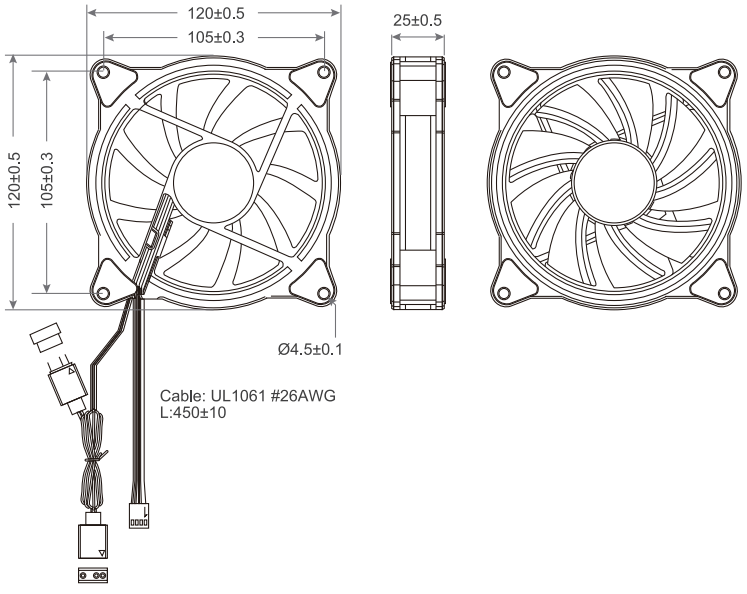

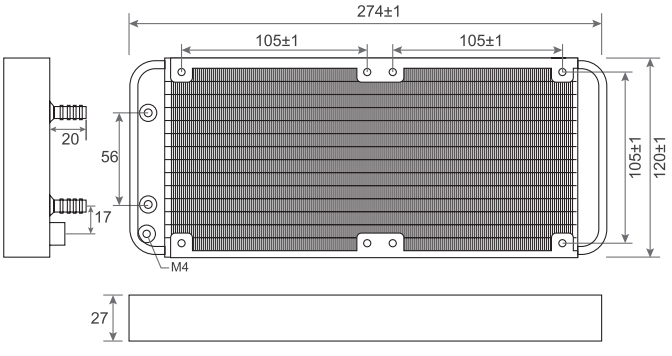

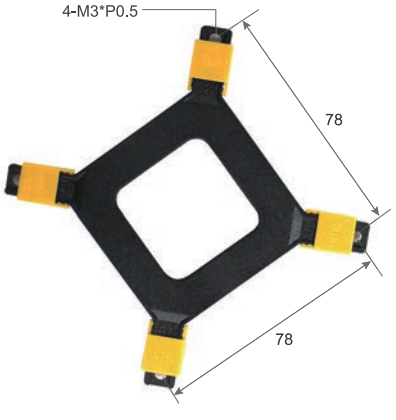

Model No.	Bearing Type	Voltage (VDC)	Current (A)	Power (W)	Speed (RPM)	Air Flow (CFM)	Air Flow (m^3/min)	Air Pressure (mmH_2O)	Air Pressure (Inch H_2O)	Noise (dBA)
LCF240S1	★	12(5~13.8)	0.19	2.28	1800	60.5	1.71	1.72	0.07	28.8

ⓧ Bearing System ※：Sleeve ★：WRB Bearing ◎：Ball

★如果您需要的轉速或電壓或功能不在這份清單上，請與我們業務聯繫 Please contact us, if the SPEC you need is not in the list.

★產品詳細數據及功能請參閱承認書 Please see the approval sheet for more information . ★產品規格變更不另行通知 Specifications are subject to change without notice.

Integrated Water Cooling
LCF360 SERIES

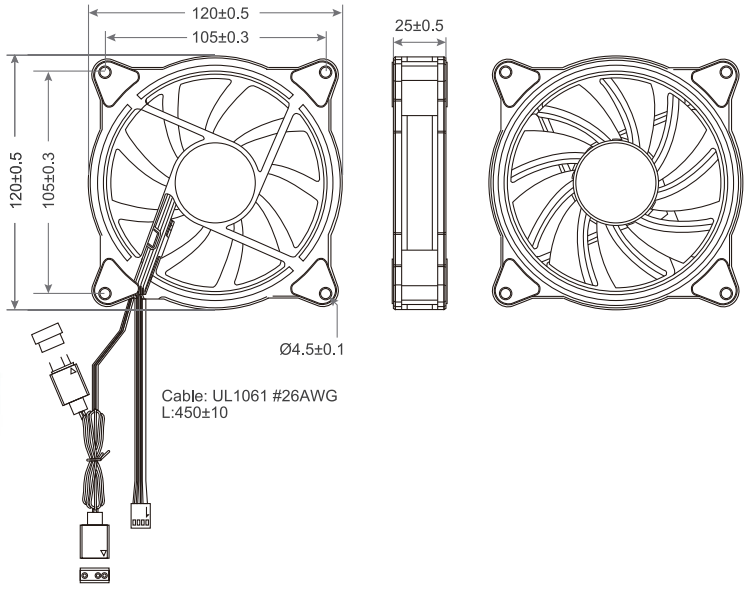

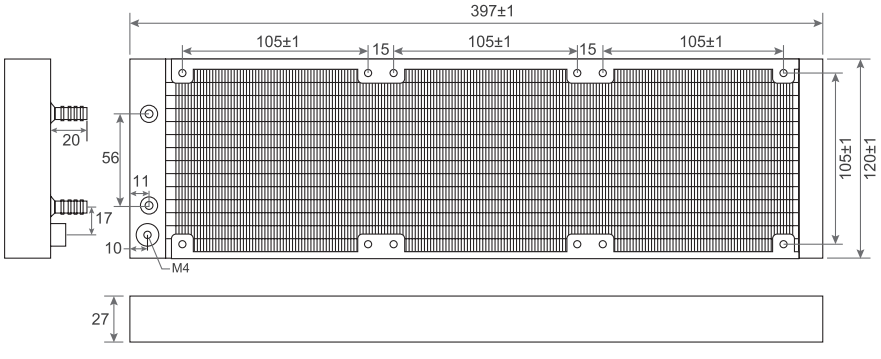

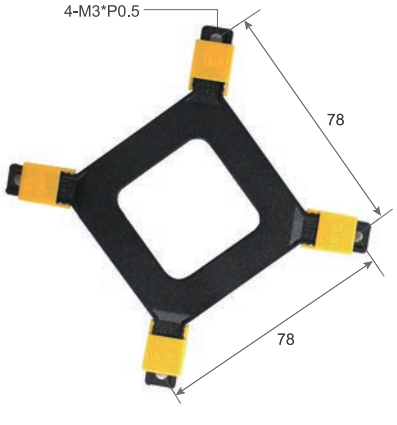

Model No.	Bearing Type	Voltage (VDC)	Current (A)	Power (W)	Speed (RPM)	Air Flow (CFM)	Air Flow (m^3/min)	Air Pressure (mmH$_2$O)	Air Pressure (Inch H$_2$O)	Noise (dBA)
LCF360S1	★	12(5~13.8)	0.19	2.28	1800	60.5	1.71	1.72	0.07	28.8

(X) Bearing System ※ : Sleeve ★ : WRB Bearing ◎ : Ball

★如果您需要的轉速或電壓或功能不在這份清單上，請與我們業務聯繫 Please contact us, if the SPEC you need is not in the list.

★產品詳細數據及功能請參閱承認書 Please see the approval sheet for more information . ★產品規格變更不另行通知 Specifications are subject to change without notice.

Integrated Water Cooling
LCF140 SERIES

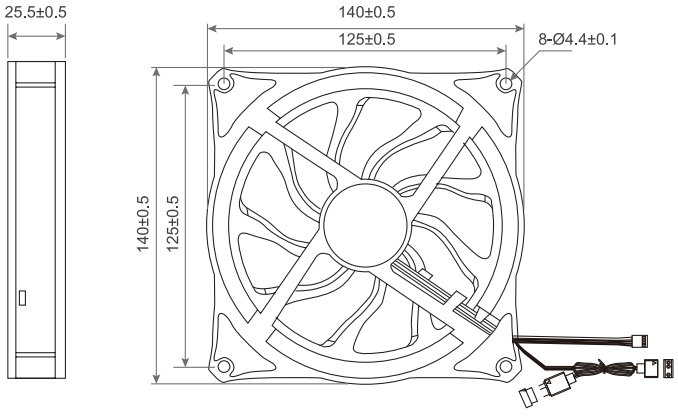

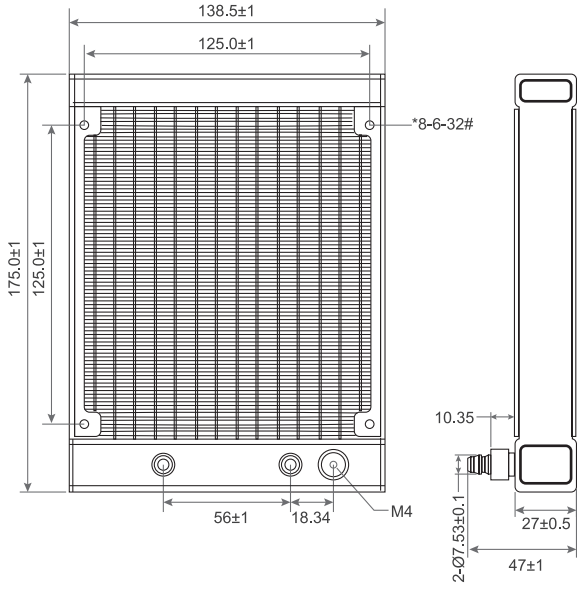

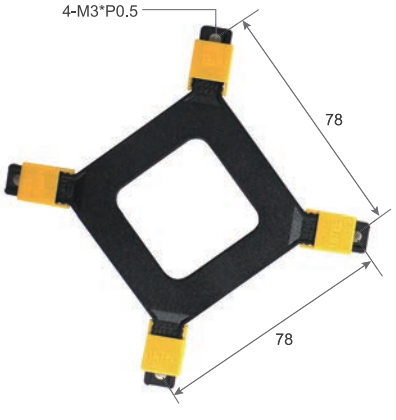

Model No.	Bearing Type	Voltage (VDC)	Current (A)	Power (W)	Speed (RPM)	Air Flow (CFM)	Air Flow (m^3/min)	Air Pressure (mmH_2O)	Air Pressure (Inch H_2O)	Noise (dBA)
LCF140S1	★	12(5~13.8)	0.19	2.28	1800	60.5	1.71	1.72	0.07	28.8

Ⓧ Bearing System ※：Sleeve ★：WRB Bearing ◎：Ball

★如果您需要的轉速或電壓或功能不在這份清單上，請與我們業務聯繫 Please contact us, if the SPEC you need is not in the list.

★產品詳細數據及功能請參閱承認書 Please see the approval sheet for more information . ★產品規格變更不另行通知 Specifications are subject to change without notice.

LCF280 SERIES

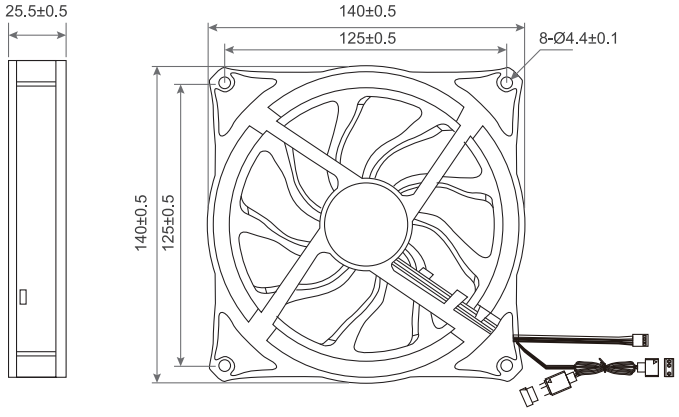

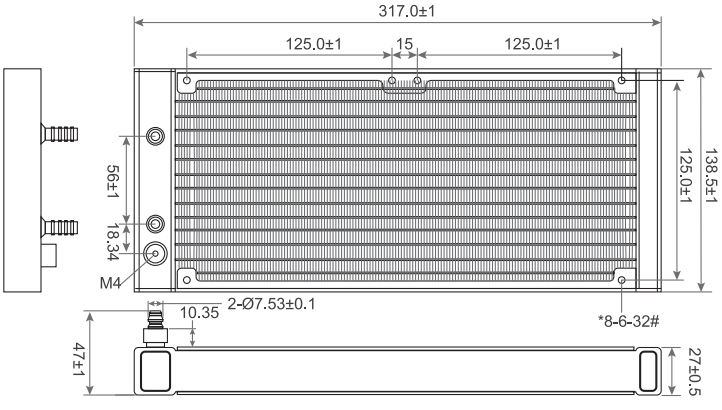

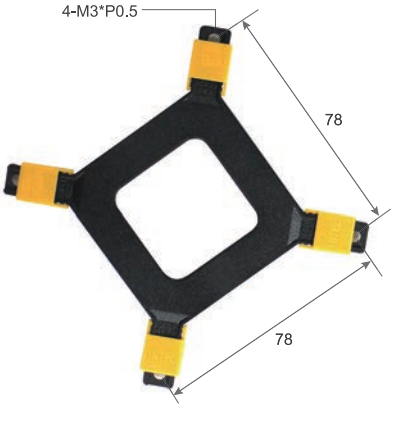

Model No.	Bearing Type	Voltage (VDC)	Current (A)	Power (W)	Speed (RPM)	Air Flow (CFM)	Air Flow (m^3/min)	Air Pressure (mmH2O)	Air Pressure (Inch H2O)	Noise (dBA)
LCF280S1	★	12(5~13.8)	0.19	2.28	1800	60.5	1.71	1.72	0.07	28.8

(X) Bearing System ※ : Sleeve ★ : WRB Bearing ◎ : Ball

★如果您需要的轉速或電壓或功能不在這份清單上，請與我們業務聯繫 Please contact us, if the SPEC you need is not in the list.

★產品詳細數據及功能請參閱承認書 Please see the approval sheet for more information . ★產品規格變更不另行通知 Specifications are subject to change without notice.

控制器 Controller

電　　壓：DC12V LED:DC5V
電　　流：風扇每個0.25-0.4A
外殼材質：ABS PCB材質，FR4
LED：按接入風扇及燈帶的數量計算控制方式，RF無線

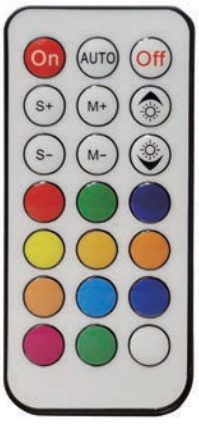

遙控器 Remote Control

電　　壓：3V
電池電流：150MA PCB：HB
外殼材質：ABS
控制方式：RF無線
頻　　率：433.92 MHz

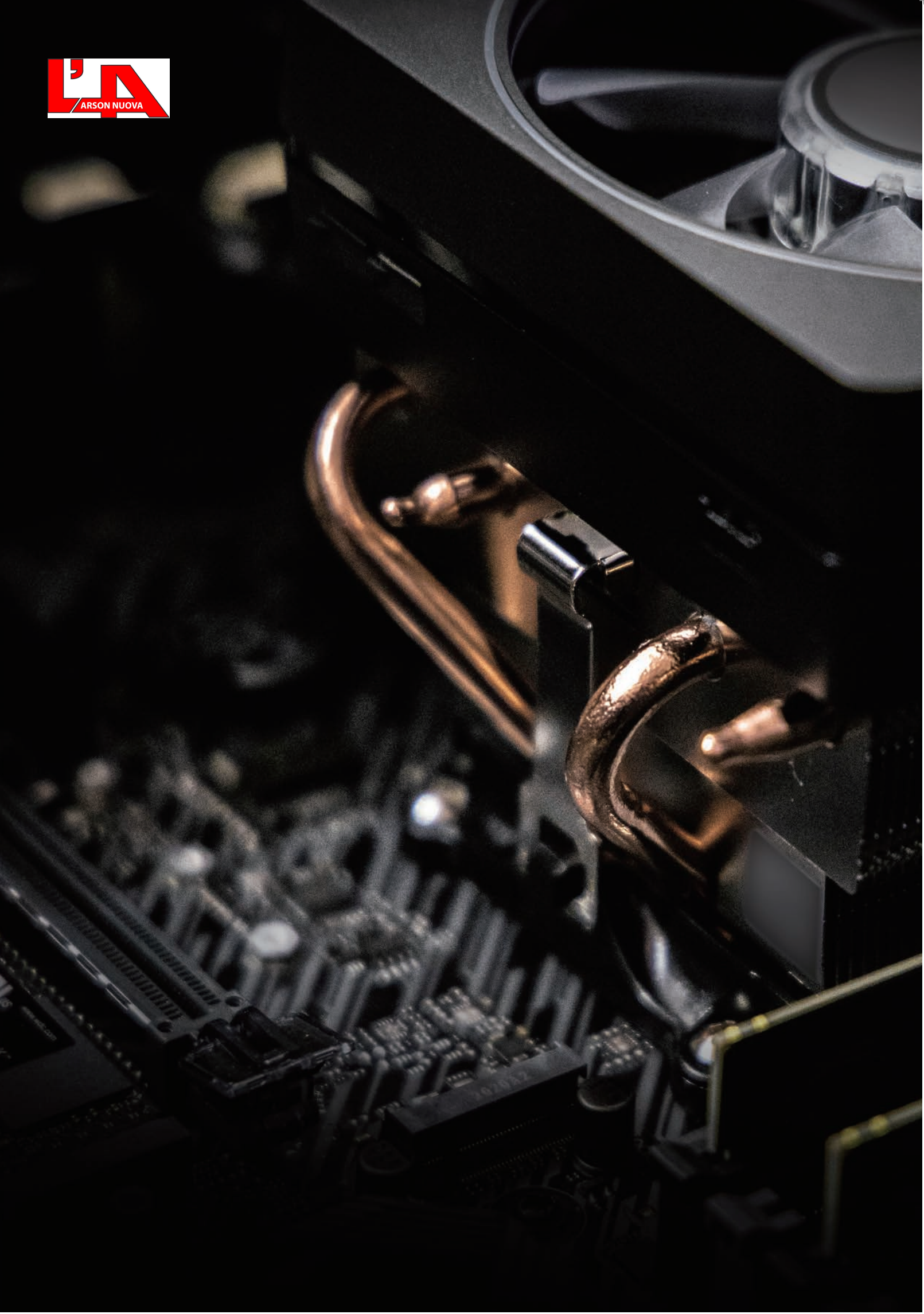

CPU cooler

intel Socket LGA1700

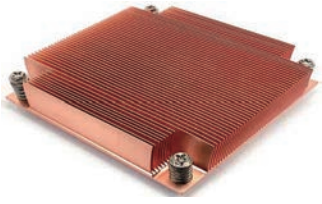

Model Name	CQ1	CQ2	CQ3
Support CPU Heat Dissipation Power	125 W	125 W	125 W
Application	1U Passive	2U Passive	1U Active
Dimension｜mm	90.0 x 90.0 x 27.0	90.0 x 90.0 x 66.0	90.0 x 90.0 x 28.0
Weight｜g	534g	653g	444g
Material	Copper Heat Sink with Skiving Fins	Copper Base with Aluminum Stacked Fin plus 4 Heat Pipes	Copper Heat Sink with Skiving Fins
FAN/Blower	NA	NA	TRB8015
FAN/Specifiction	NA	NA	7000RPM/59.17dBA/PWM

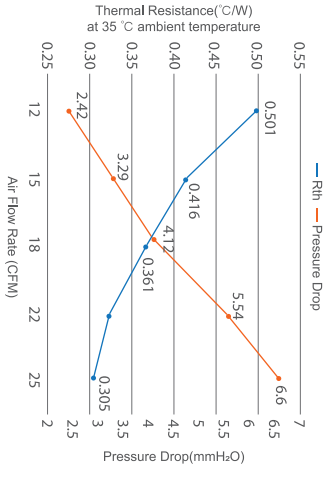

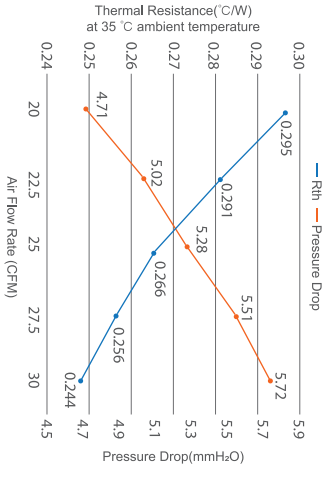

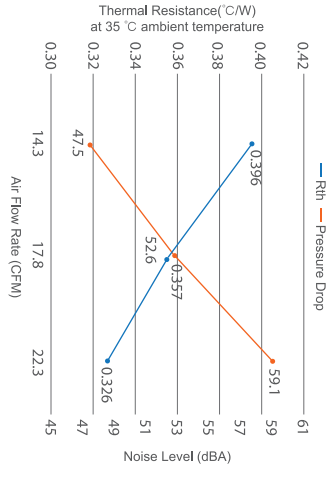

★如果您需要的規格不在這份清單上，請與我們業務聯繫 Please contact us, if the SPEC you need is not in the list.
★產品詳細數據及功能請參閱承認書 Please see the approval sheet for more information . ★產品規格變更不另行通知 Specifications are subject to change without notice.

CPU cooler

intel Socket LGA1700

Model Name	CQ5	CQ6
Support CPU Heat Dissipation Power	125 W	125 W
Application	2U Active	2U Passive
Dimension｜mm	90.7 x 85.0 x 65.1	90.0 x 90.0 x 66.0
Weight｜g	515g	653g
Material	Copper Base & Aluminum Fins with Heat Pipe embedded	Copper Base with Aluminum Stacked Fin plus 4 Heat Pipes
FAN/Blower	TRS6025	TRS9225
FAN/Specifiction	8000RPM/52.94dBA/PWM	6000RPM/50.40dBA/PWM

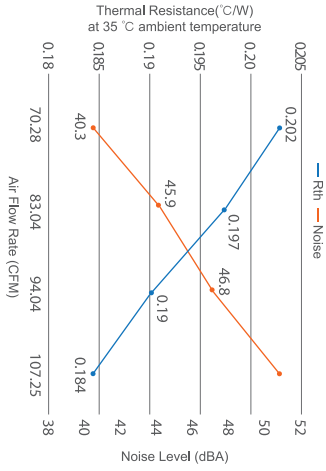

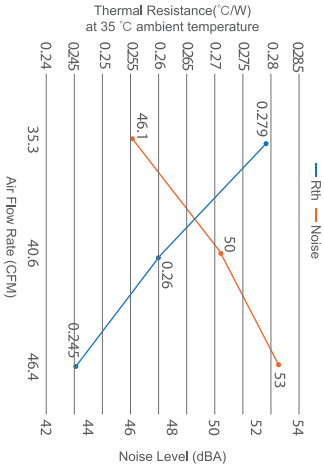

★如果您需要的規格不在這份清單上，請與我們業務聯繫 Please contact us, if the SPEC you need is not in the list.
★產品詳細數據及功能請參閱承認書 Please see the approval sheet for more information . ★產品規格變更不另行通知 Specifications are subject to change without notice.

CPU cooler

intel Socket LGA115X_1200

Model Name	CK129	CK199	CT168
Support CPU Heat Dissipation Power	125 W	125 W	150 W
Application	1U Passive	1U Active	1U Active
Dimension｜mm	90.0 x 90.0 x 26.5	85.0 x 81.5 x 28.5	90.0 x 92.5 x 28.4
Weight｜g	490g	355g	390g
Material	Copper Skiving Fin	Copper Skiving Fin	Copper Stacked Fin Vapor Chamber Base
FAN/Blower	-	TRS8015	TRB8015
FAN/Specifiction	-	5000rpm/51.7dBA/PWM	7000RPM/59.1dBA/PWM

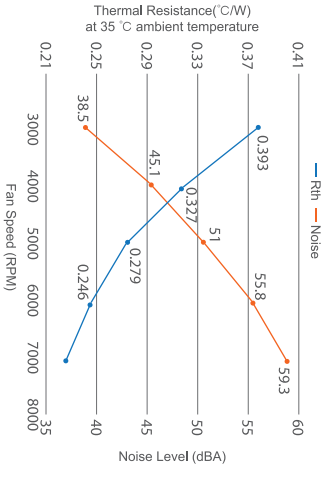

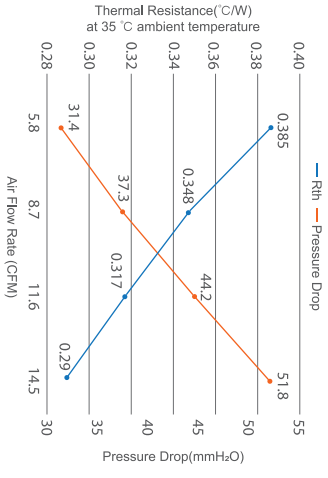

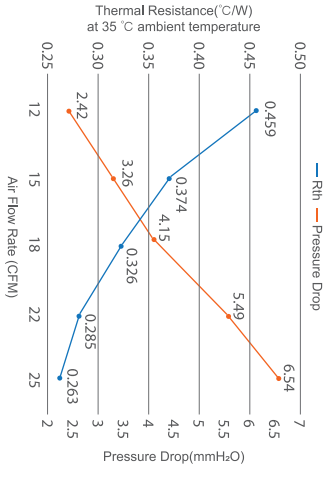

CPU cooler

intel Socket LGA115X_1200

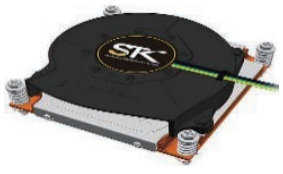

Model Name	CT06	CK618	CK555
Support CPU Heat Dissipation Power	125 W	125 W	125 W
Application	1U Active	2U Passive	2U Active
Dimension｜mm	82.6 x 81.0 x 28.25	90.0 x 90.0 x 66.0	94.0 x 87.5 x 28.0
Weight｜g	355g	490g	460g
Material	Copper Skiving Fin	Aluminum Stacked Fin with Heat Pipes	Aluminum Stacked Fin Copper Base
FAN/Blower	TRB8015	-	TRS7020
FAN/Specifiction	7000RPM/59.1dBA/PWM	-	4500RPM/33dBA/PWM

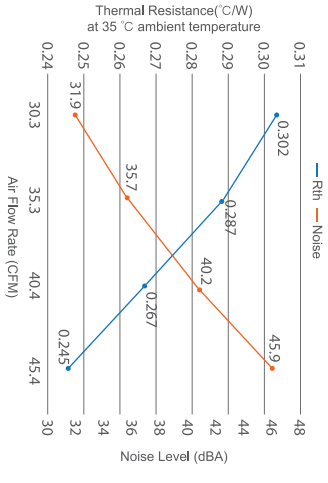

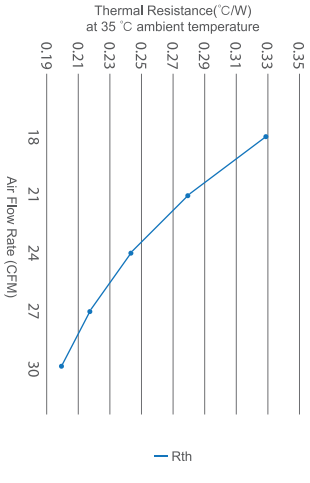

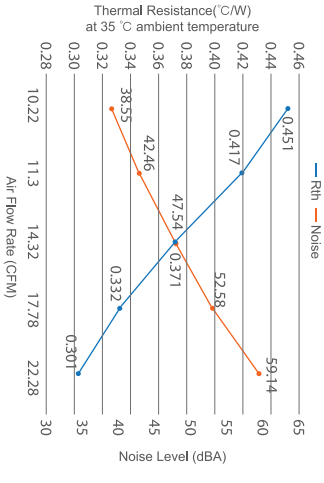

★如果您需要的規格不在這份清單上，請與我們業務聯繫 Please contact us, if the SPEC you need is not in the list.
★產品詳細數據及功能請參閱承認書 Please see the approval sheet for more information . ★產品規格變更不另行通知 Specifications are subject to change without notice.

CPU cooler

intel Socket LGA115X_1200

Model Name	CK668	CK17	CK985
Support CPU Heat Dissipation Power	165 W	125 W	125 W
Application	2U Active	3U Active	3U Active
Dimension｜mm	81.0 x 80.0 x 68.0	91.0 x 91.0 x 110.0	106.0 x 106.0 x 72.6
Weight｜g	700g	530g	500g
Material	Copper Heatsink with Heat Pipes	Aluminum Fins, 4x Heat Pipes with H.C.C. Technology	Aluminum Extruded Radial Heatsink with Copper Core
FAN/Blower	TRS6025	TRD9225	TRD9225
FAN/Specifiction	8000RPM/54.2dBA/PWM	2500RPM/31.9dBA/PWM	2500RPM/29.8dBA/PWM

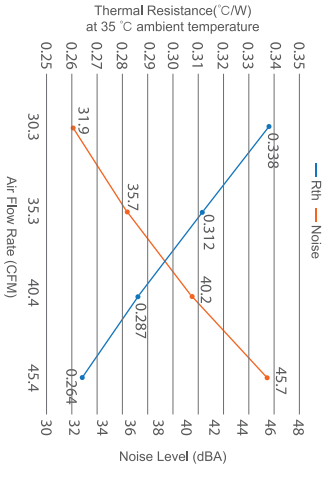

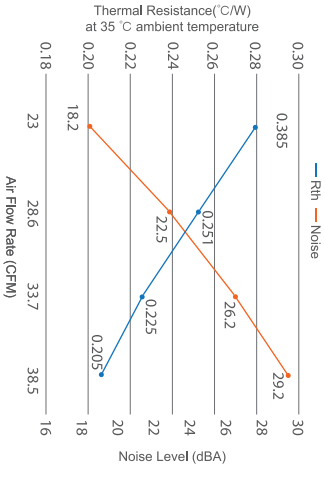

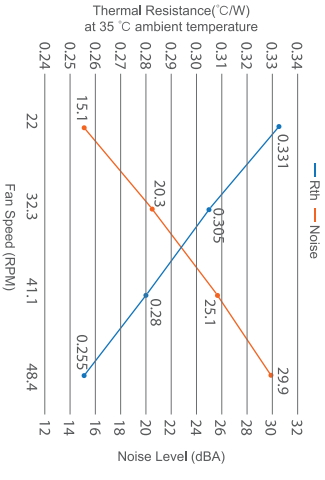

★如果您需要的規格不在這份清單上，請與我們業務聯繫 Please contact us, if the SPEC you need is not in the list.
★產品詳細數據及功能請參閱承認書 Please see the approval sheet for more information . ★產品規格變更不另行通知 Specifications are subject to change without notice.

CPU cooler

intel Socket LGA115X_1200

Model Name	CK987	CL25-1	CL15
Support CPU Heat Dissipation Power	125 W	250 W	250 W
Application	3U & Desktop Active	1U Liquid Cooler	4U Workstation liquid cooler
Dimension｜mm	106.0 x 106.0 x 72.6	277.9 x 74.0 x 40.0	276.0 x 120.0 x 53.0
Weight｜g	500g	-	-
Material	Aluminum Extruded Radial Heatsink with Copper Core	Aluminum Heatsink Copper Base	Aluminum Heatsink Copper Base
FAN/Blower	TRS9225	TRD4028	TRD1225
FAN/Specifiction	2800RPM/34.4dBA/PWM	12000RPM/54.0dBA/PWM	2400RPM/38.0dBA/PWM

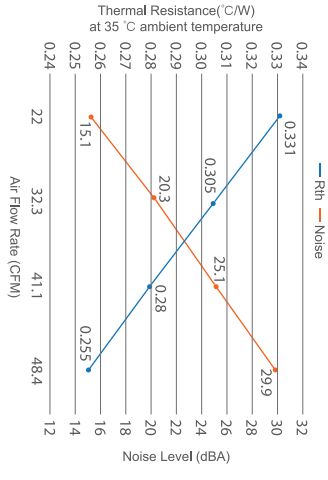

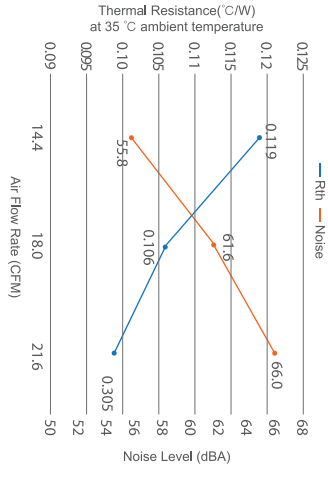

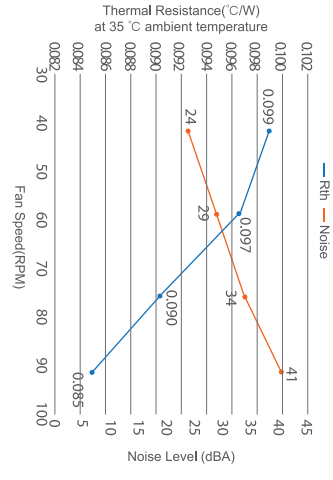

★如果您需要的規格不在這份清單上，請與我們業務聯繫 Please contact us, if the SPEC you need is not in the list.
★產品詳細數據及功能請參閱承認書 Please see the approval sheet for more information . ★產品規格變更不另行通知 Specifications are subject to change without notice.

CPU cooler

intel Socket FCLGA 3647

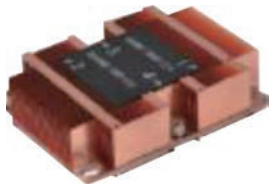

Model Name	CB4A	CB18	CB16
Support CPU Heat Dissipation Power	205 W	205 W	205 W
Application	1U Passive	1U Active	1U Active
Dimension｜mm	108.0 x 81.0 x 27.0	108.0 x 81.5 x 26.0	108.0 x 81.0 x 28.0
Weight｜g	480g	460g	500g
Material	Copper Stacked Fin Heatsink with Vapor Chamber Base (fan pitch 1.8)	Copper Stacked Fin Heatsink with Vapor Chamber Base	Copper Stacked Fin Heatsink with Vapor Chamber Base
FAN/Blower	-	TRB8013	TRB8013
FAN/Specifiction	-	8000RPM/62.0dBA/PWM	8000RPM/62.0dBA/PWM

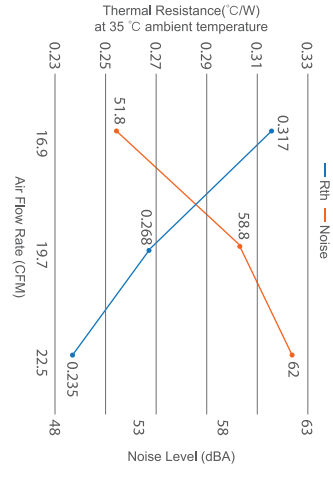

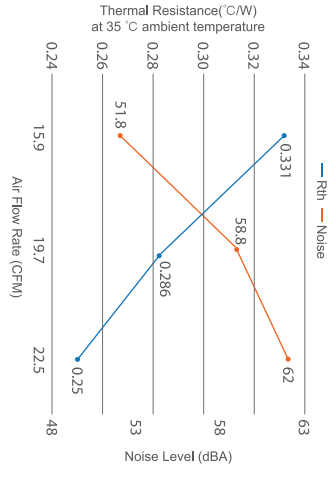

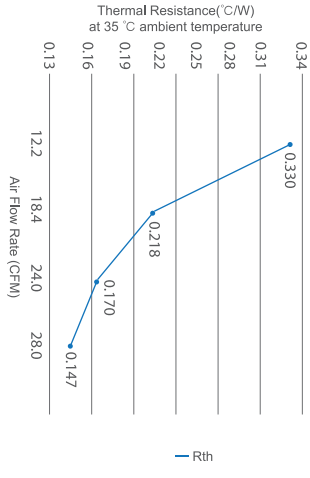

★如果您需要的規格不在這份清單上，請與我們業務聯繫 Please contact us, if the SPEC you need is not in the list.
★產品詳細數據及功能請參閱承認書 Please see the approval sheet for more information . ★產品規格變更不另行通知 Specifications are subject to change without notice.

CPU cooler

intel Socket FCLGA 3647

Model Name	CB8	CB5	CB11
Support CPU Heat Dissipation Power	205 W	205 W	205 W
Application	2U Passive	2U Active	3U Active
Dimension｜mm	108.0 x 80.0 x 64.0	108.0 x 80.0 x 66.0	108.0 x 80.0 x 110.0
Weight｜g	600g	470g	600g
Material	Aluminum Stacked fin soldered on Copper base with 4x Heat Pipes embedded	Aluminum Heatsink with 4x Heat Pipes embedded	Aluminum Heatsink with 5x Heat Pipes embedded
FAN/Blower	-	TRS6025	TRS6025
FAN/Specifiction	-	7000RPM/50.0dBA/PWM	7000RPM/42.2dBA/PWM

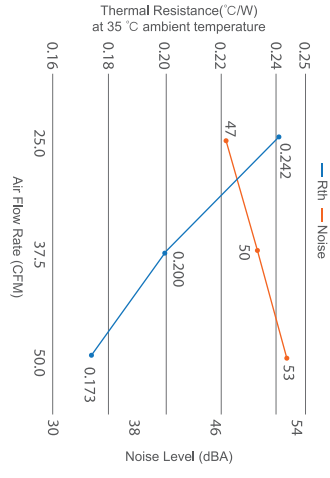

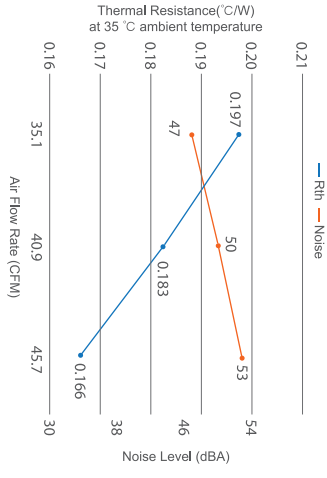

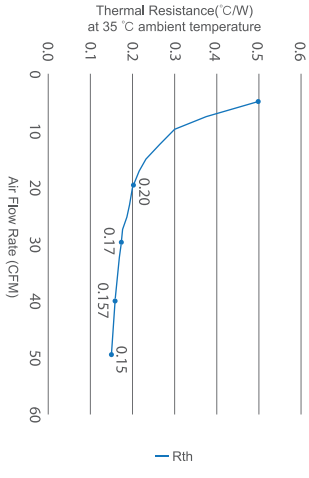

★如果您需要的規格不在這份清單上，請與我們業務聯繫 Please contact us, if the SPEC you need is not in the list.
★產品詳細數據及功能請參閱承認書 Please see the approval sheet for more information . ★產品規格變更不另行通知 Specifications are subject to change without notice.

CPU cooler

intel Socket FCLGA 3647

Model Name	**CB6**	**CB12**	**CB14**
Support CPU Heat Dissipation Power	205 W	125 W	205 W
Application	1U Passive	2U Passive	3U Active
Dimension｜mm	90.0 x 90.0 x 27.0	90.0 x 90.0 x 64.0	90.0 x 90.0 x 110.0
Weight｜g	420g	590g	600g
Material	Copper Stacked Fin Heatsink with Vapor Chamber Base	Aluminum Stacked Fin with 4x Heat Pipes embedded	Aluminum Heatsink with 5x Heat Pipes embedded
FAN/Blower	-	-	TRS8025
FAN/Specifiction	-	-	4000RPM/42.2dBA/PWM
	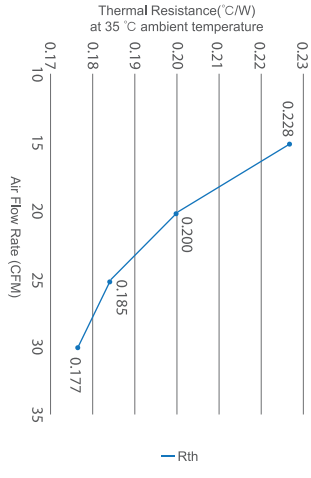	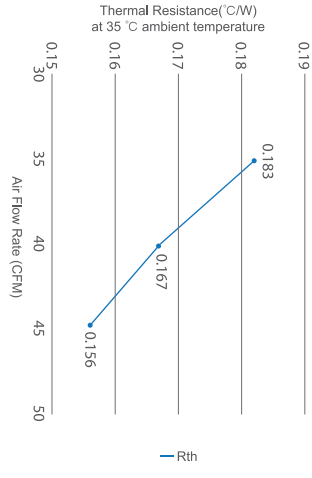	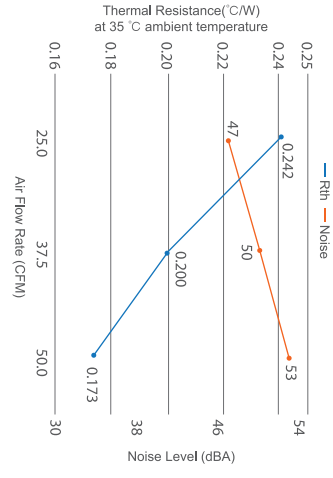

★如果您需要的規格不在這份清單上，請與我們業務聯繫 Please contact us, if the SPEC you need is not in the list.
★產品詳細數據及功能請參閱承認書 Please see the approval sheet for more information . ★產品規格變更不另行通知 Specifications are subject to change without notice.

CPU cooler

intel Socket FCLGA 4677

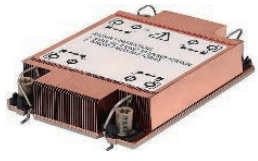

Model Name	CS2	CS3	CS4
Support CPU Heat Dissipation Power	300 W	205 W	205 W
Application	2U Passive	1U Active	1U Passive
Dimension｜mm	118.0 x 78.0 x 64.0	118.0 x 80.0 x 27.0	118.0 x 78.0 x 27.0
Weight｜g	526.6g	424.6g	473.6g
Material	Copper Vapor Chamber and heat pipe, Aluminum Fin Stack	Copper1100 Heatsink with Vapor Chamber Base	Copper Vapor Chamber and Fin Stack
FAN/Blower	-	TRB8013	-
FAN/Specifiction	-	8600RPM/62.0dBA/PWM	-

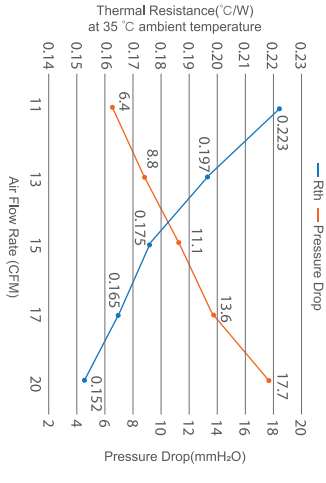

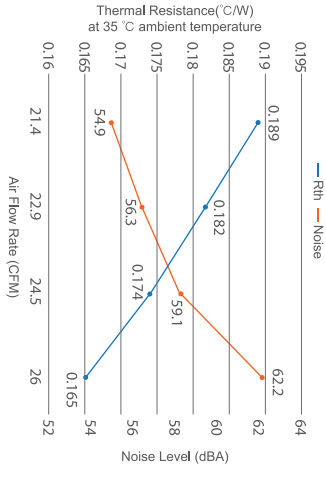

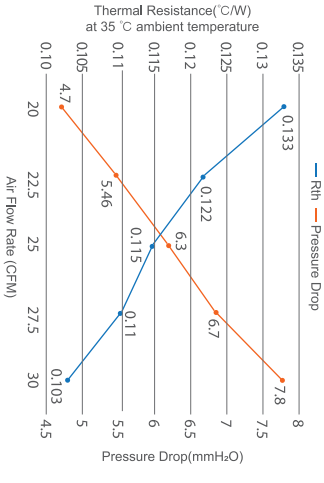

★如果您需要的規格不在這份清單上，請與我們業務聯繫 Please contact us, if the SPEC you need is not in the list.

★產品詳細數據及功能請參閱承認書 Please see the approval sheet for more information . ★產品規格變更不另行通知 Specifications are subject to change without notice.

CPU cooler

intel Socket FCLGA 4677

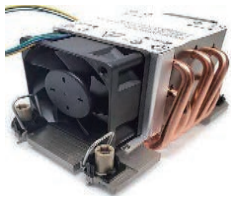

Model Name	CS5	CS6
Support CPU Heat Dissipation Power	300 W	300W
Application	2U Active	3U Active
Dimension｜mm	90.0 x 90.0 x 64.0	108.0 x 80.0 x 110.0
Weight｜g	425.1g	659.3g
Material	5 Heatpipes with Aluminum Fin Base and Aluminum Fin Stack	Aluminum Stacked-Fin with Heat Pipes directly contact CPU
FAN/Blower	TRD6025	TRS8038
FAN/Specifiction	11000RPM/59.8dBA/PWM	4500RPM/50.9dBA/PWM

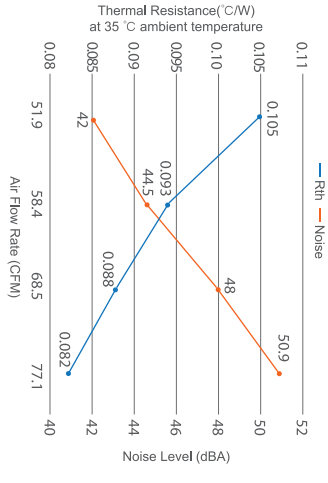

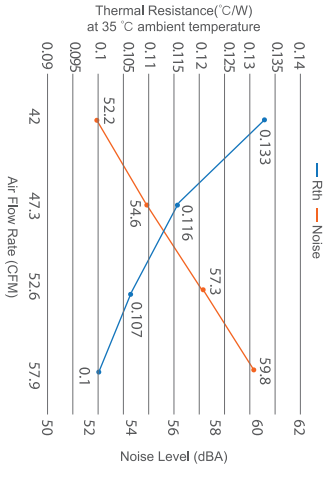

CPU cooler

intel Socket FCLGA 4189

Model Name	**CN2**	**CN3**	**CN6**
Support CPU Heat Dissipation Power	270 W	205 W	270 W
Application	2U Passive	1U Active	3U Active
Dimension｜mm	113.0 x 78.0 x 64.0	113.0 x 80.0 x 27.0	113.0 x 78.0 x 110.0
Weight｜g	460g	410g	600g
Material	Aluminum for both heat sink Base and Fin Stack	Copper1100 Heatsink with Vapor Chamber Base	Aluminum Stacked-fin with Heat Pipes directly contact CPU
FAN/Blower	-	TRB8013	TRS8038
FAN/Specifiction	-	8600RPM/62.2dBA/PWM	3000RPM/42.15dBA/PWM

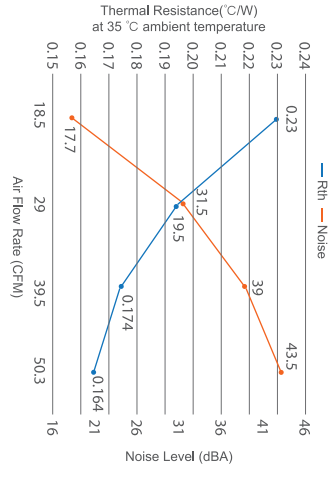

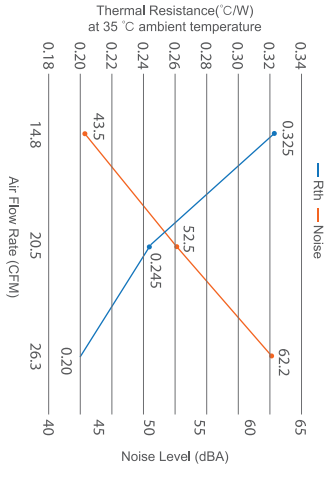

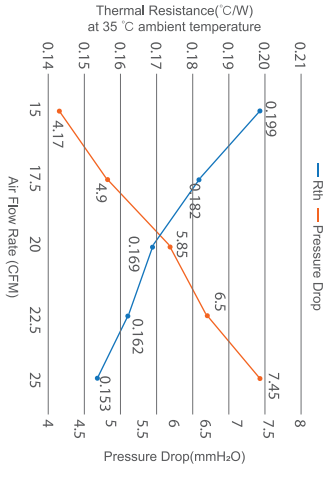

★如果您需要的規格不在這份清單上，請與我們業務聯繫 Please contact us, if the SPEC you need is not in the list.
★產品詳細數據及功能請參閱承認書 Please see the approval sheet for more information . ★產品規格變更不另行通知 Specifications are subject to change without notice.

CPU cooler

AMD Socket AM4

Model Name	**CA37**	**CA24**	**CA19**
Support CPU Heat Dissipation Power	105 W	165 W	165W
Application	1U Passive	2U Active	3U Active
Dimension｜mm	106.0 x 74.0 x 27.0	107.0 x 78.0 x 67.0	107.0 x 78.0 x 110.0
Weight｜g	586g	400g	550g
Material	Copper Heat Sink with Skiving Fins	Aluminum Heatsink with Heatpipe Embedded	Aluminum Heatsink with Heatpipe Embedded
FAN/Blower	-	TRS6028	TRS8038
FAN/Specifiction	-	7000RPM/47.5dBA/PWM	3800RPM/43.4dBA/PWM

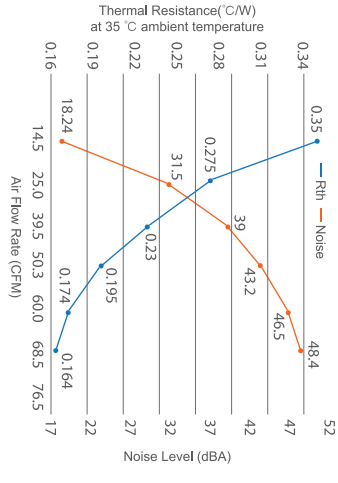

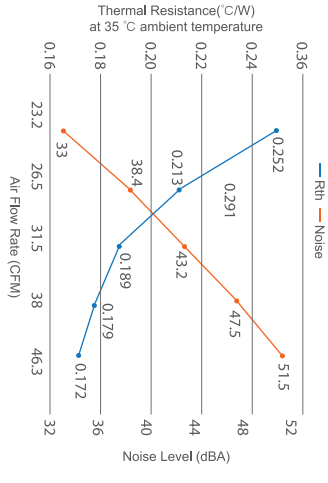

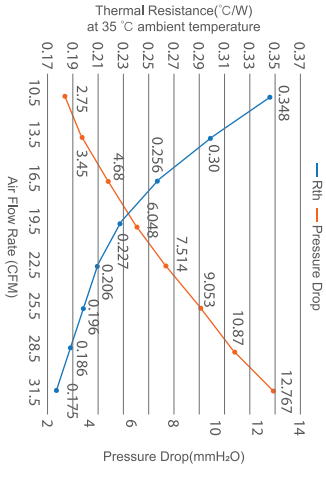

★如果您需要的規格不在這份清單上，請與我們業務聯繫 Please contact us, if the SPEC you need is not in the list.
★產品詳細數據及功能請參閱承認書 Please see the approval sheet for more information . ★產品規格變更不另行通知 Specifications are subject to change without notice.

CPU cooler

AMD Socket SP3/TR4/sTRX4

Model Name	CA28	CA31	CA34
Support CPU Heat Dissipation Power	180 W	225 W	180W
Application	1U Passive	1U Active	2U Passive
Dimension｜mm	120.0 x 82.0 x 27.0	120.0 x 82.0 x 27.0	113.0 x 80.0 x 64.0
Weight｜g	450g	480g	450g
Material	Copper Stacked Fin Vapor Chamber Base	Copper Stacked Fin Vapor Chamber Base	Aluminum Heatsink with 4x Heat Pipes embedded
FAN/Blower	-	TRB8013	-
FAN/Specifiction	-	8000RPM/62.0dBA/PWM	-

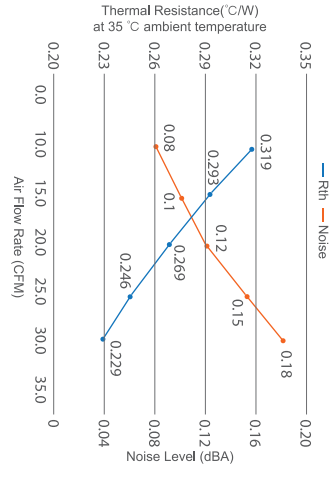

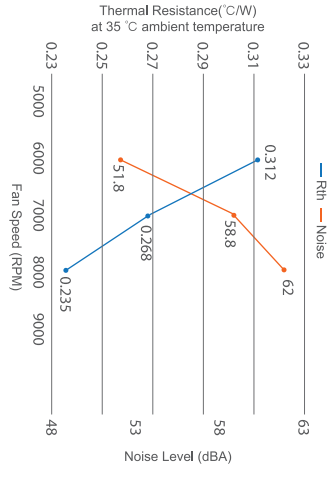

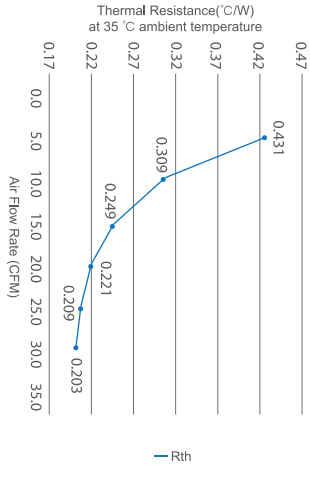

★如果您需要的規格不在這份清單上，請與我們業務聯繫 Please contact us, if the SPEC you need is not in the list.
★產品詳細數據及功能請參閱承認書 Please see the approval sheet for more information . ★產品規格變更不另行通知 Specifications are subject to change without notice.

CPU cooler

AMD Socket SP3/TR4/sTRX4

	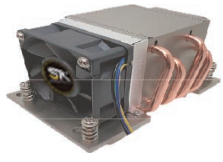		
Model Name	**CA38**	**CA39**	**CL19**
Support CPU Heat Dissipation Power	180 W	225 W	280W
Application	2U Active	3U Active	1U liquid cooler
Dimension｜mm	119.0 x 79.0 x 65.0	120.0 x 82.0 x 110.0	188.0 x 74.0 x 40.0
Weight｜g	450g	600g	-
Material	Aluminum Heatsink with 4x Heat pipes Embedded	Aluminum Heatsink with 4x Heat pipes Embedded	Aluminum Fin and Copper Base
FAN/Blower	TRD6025	TRS8038	TRD4028
FAN/Specifiction	11000RPM/59.8dBA/PWM	6000RPM/57.2dBA/PWM	18000RPM/57.0dBA/PWM
	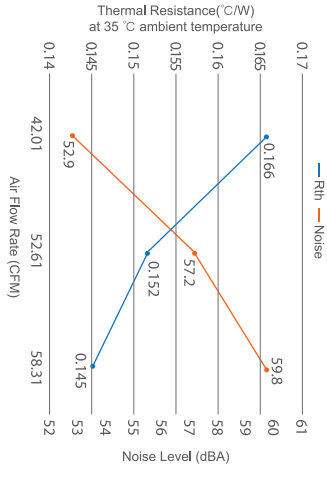	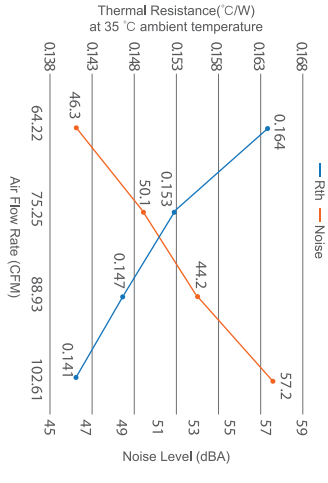	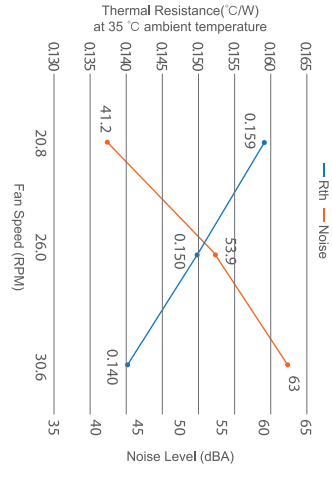

★如果您需要的規格不在這份清單上，請與我們業務聯繫 Please contact us, if the SPEC you need is not in the list.
★產品詳細數據及功能請參閱承認書 Please see the approval sheet for more information . ★產品規格變更不另行通知 Specifications are subject to change without notice.

HEATSINK

CUSTOMIZED

Insert Fin
穿FIN製程

Buckle
扣FIN製程

Stamping
鋁沖壓製程

Extrusion
鋁擠製程

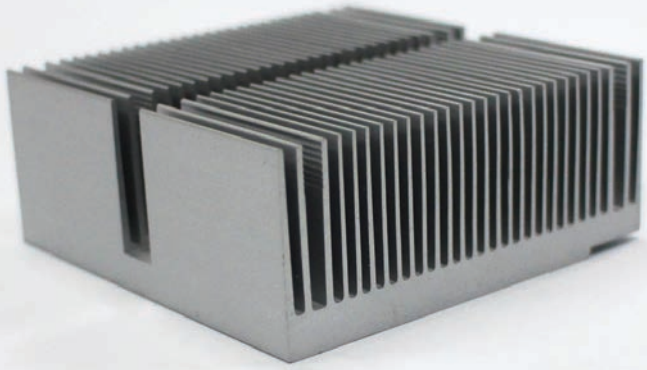

Die Casting
壓鑄製程

Thermal Pad
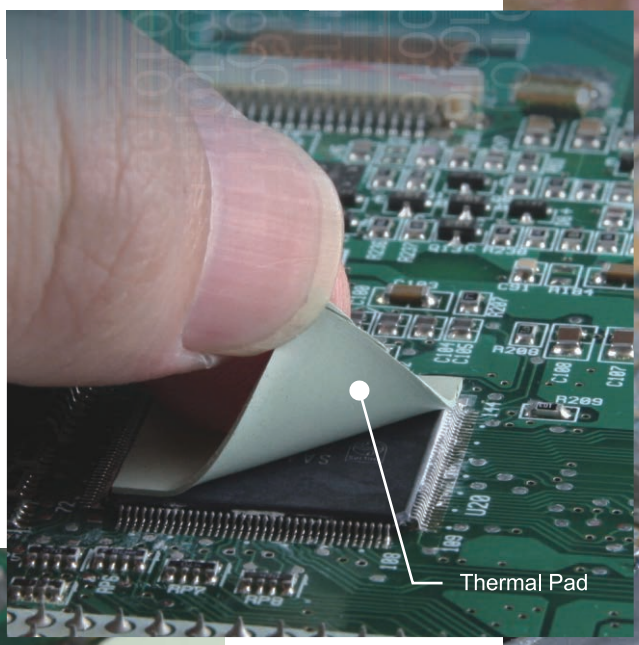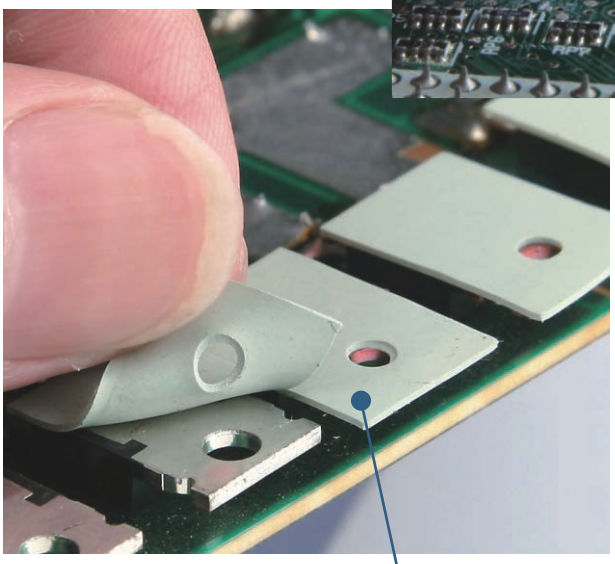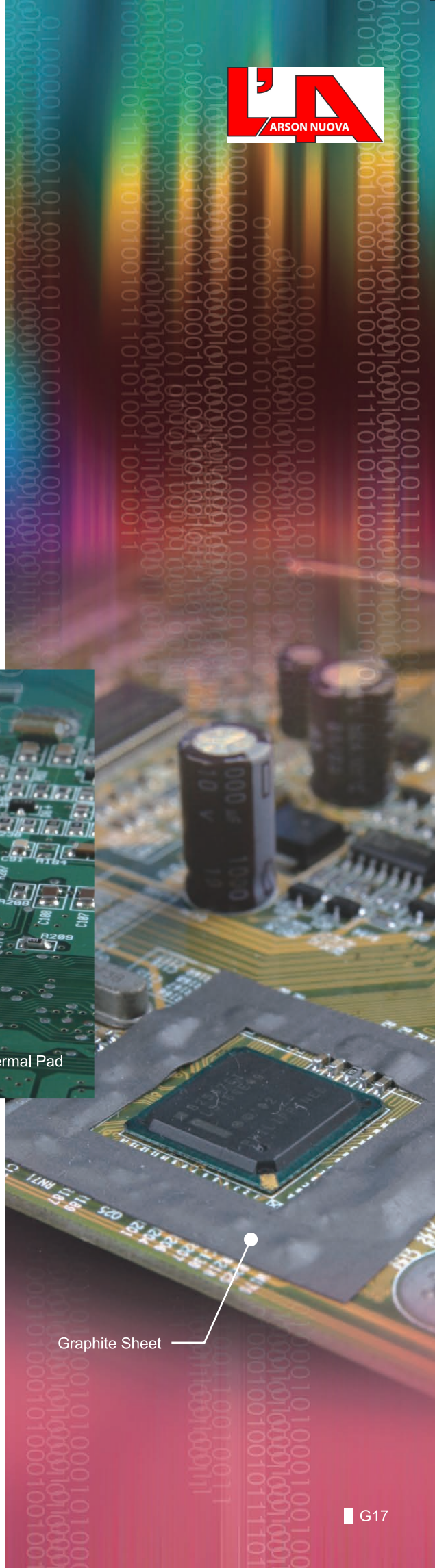
CUSTOMIZED